Technical Data
Data Sheet N1286, Rev. A

SDUR1560CT SDURB1560CT SDURD1560CT
ULTRAFAST RECTIFIER

Applications

- Antiparallel diode for high frequency switching devices
- Anti saturation diode
- Snubber diode
- Free wheeling diode in converters and motor control circuits
- Rectifiers in switch mode power supplies (SMPS)
- Inductive heating and melting
- Uninterruptible power supplies (UPS)
- Ultrasonic cleaners and welders

Features

- Ultra-Fast Switching
- High Current Capability
- Low Reverse Leakage Current
- High Surge Current Capability
- Plastic Material has UL Flammability Classification 94V-O
- "-A" is an AEC-Q101 qualified device
- This is a Pb − Free Device
- All SMC parts are traceable to the wafer lot
- Additional testing can be offered upon request

SDUR1560CT	SDURB1560CT	SDURD1560CT
		
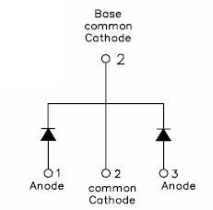	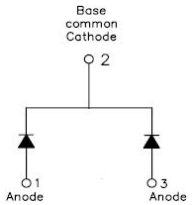	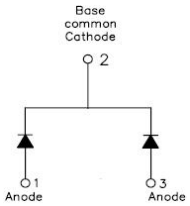
TO-220AB	D^2PAK	DPAK

Maximum Ratings:

Characteristics	Symbol	Condition	Max.	Units
Peak Repetitive Reverse Voltage Working Peak Reverse Voltage DC Blocking Voltage	V_{RRM} V_{RWM} V_R	-	600	V
Average Rectified Forward Current	$I_{F\ (AV)}$	50% duty cycle @Tc=105°C, rectangular wave form	8(Per Leg) 15(Per Device)	A
Peak One Cycle Non-Repetitive Surge Current(Per Leg)	I_{FSM}	8.3ms, Half Sine pulse	110	A

Technical Data
Data Sheet N1286, Rev. A

RoHS Pb

Electrical Characteristics:

Characteristics	Symbol	Condition	Typ.	Max.	Units
Forward Voltage Drop(Per Leg)*	V_{F1}	@8A, Pulse, T_J = 25°C	1.3	1.5	V
	V_{F2}	@8A, Pulse, T_J = 125°C	-	1.3	V
Reverse Current(Per Leg)*	I_{R1}	@V_R = rated V_R , T_J = 25°C	0.4	10	μA
	I_{R2}	@V_R = rated V_R , T_J = 125°C	0.09	1.5	uA
Reverse Recovery Time(Per Leg)	t_{rr}	I_F=500mA, I_R=1A,and I_{rm}=250mA	42	50	ns

* Pulse width < 300 μs, duty cycle < 2%

Thermal-Mechanical Specifications:

Characteristics	Symbol	SDUR1560CT	SDURB1560CT	SDURD1560CT	Units
Junction Temperature	T_J	-55 to +150			°C
Storage Temperature	T_{stg}	-55 to +150			°C
Typical Thermal Resistance Junction to Case	wt	2.0	1.85	0.39	g
Case Style	TO-220AB/ D^2PAK/ DPAK				

Ratings and Characteristics Curves

Figure1
Typical Forward Characteristics

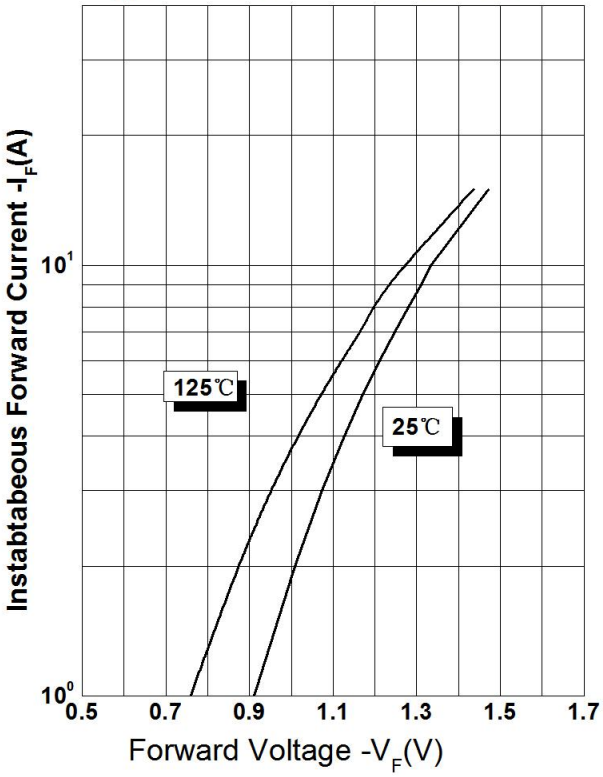

Figure 2
Typical Reverse Characteristics

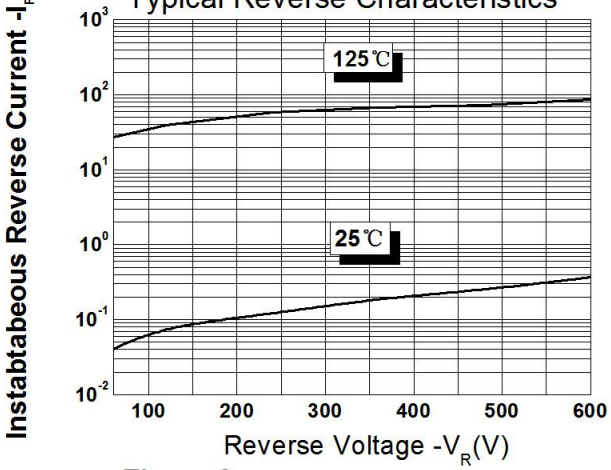

Figure 3
Typical Junction Capacitance

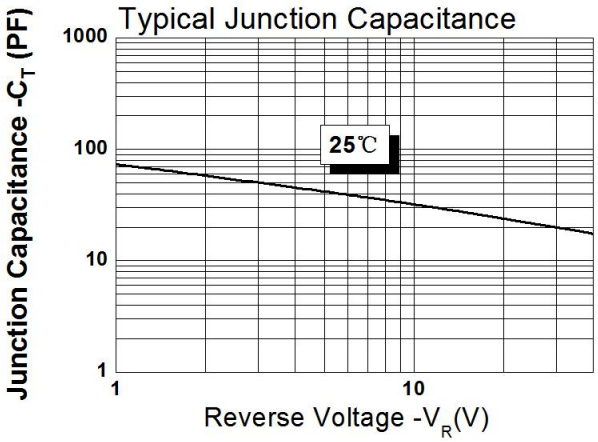

SDUR1560CT
SDURB1560CT
SDURD1560CT

Technical Data
Data Sheet N1286, Rev. A

RoHS Pb

Tube Specification

Device	Package	Shipping
SDUR1560CT	TO-220AB	50pcs / tube
SDURB1560CT	D^2 PAK	800pcs / reel
SDURB1560CTTR	D^2 PAK	800pcs / reel
SDURD1560CT	DPAK	2500pcs / reel
SDURD1560CTTR	DPAK	2500pcs / reel

For information on tape and reel specifications, including part orientation and tape sizes, please refer to our tape and reel packaging specification.

Tube Specification(TO-220AB)

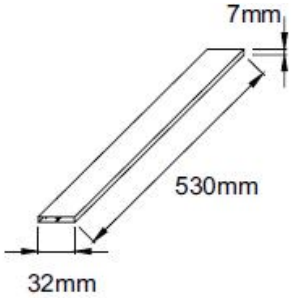

Marking Diagram

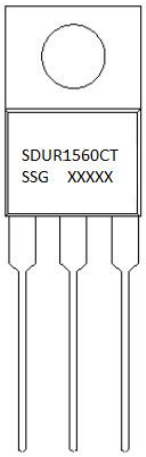

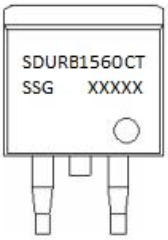

Where XXXXX is YYWWL

SDUR	= Device Type
B/D	= Package type
15	= Forward Current (15A)
600	= Reverse Voltage (600V)
CT	= Configuration
SSG	= SSG
YY	= Year
WW	= Week
L	= Lot Number

Cautions: Molding resin
Epoxy resin UL:94V-0

Carrier Tape Specification DPAK

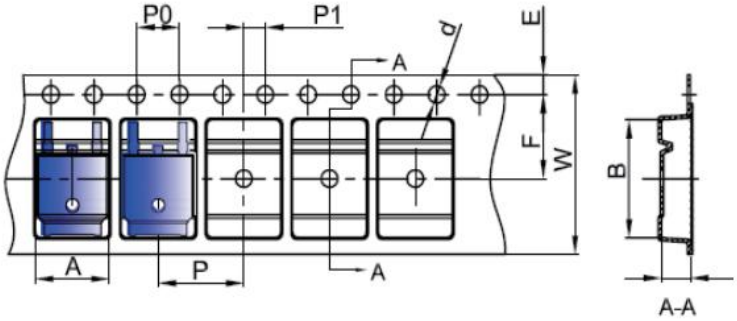

SYMBOL	Millimeters	
	Min.	Max.
A	6.80	7.00
B	10.40	10.60
C	2.60	2.80
d	Φ1.45	Φ1.65
E	1.65	1.85
F	7.40	7.60
P0	3.90	4.10
P	7.90	8.10
P1	1.90	2.10
W	15.90	16.30

Carrier Tape Specification D2PAK

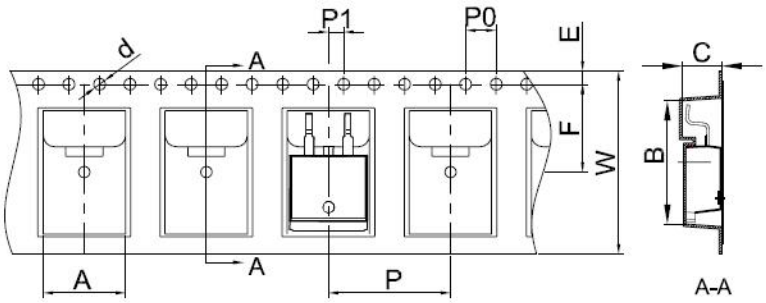

SYMBOL	Millimeters	
	Min.	Max.
A	10.70	10.90
B	16.03	16.23
C	5.11	5.31
d	1.45	1.65
E	1.65	1.85
F	11.40	11.60
P0	3.90	4.10
P	15.90	16.10
P1	1.90	2.10
W	23.90	24.30

Mechanical Dimensions TO-220AB

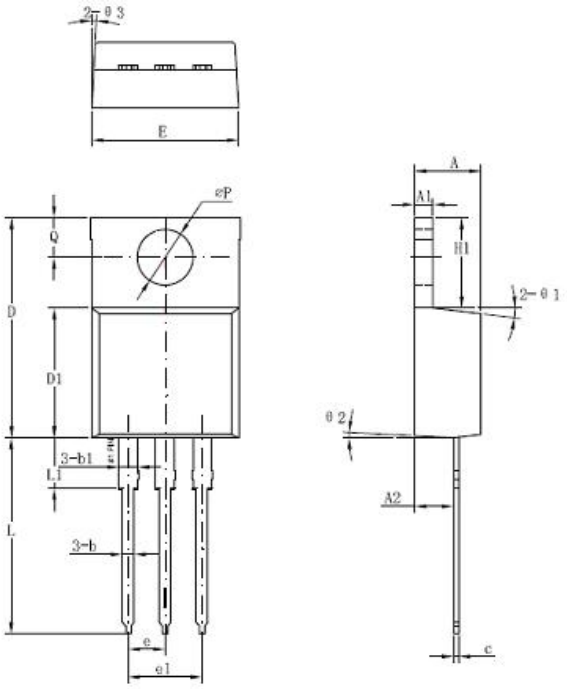

Symbol	Dimensions in millimeters		
	Min	Typical	Max
A	4.42	4.57	4.72
A1	1.17	1.27	1.37
A2	2.52	2.69	2.89
b	0.71	0.81	0.96
b1	1.17	1.27	1.37
c	0.31	0.38	0.61
D	14.94	15.24	15.54
D1	8.85	9.00	9.15
E	10.01	10.16	10.31
e		2.54	
e1	4.98	5.06	5.18
H1	6.04	6.24	6.44
L	12.7	13.56	13.80
L1	3.56	3.5	3.96
ΦP	3.74	3.84	4.04
Q	2.54	2.74	2.94
Θ1		7°	
Θ2		3°	
Θ3		4°	

Mechanical Dimensions DPAK

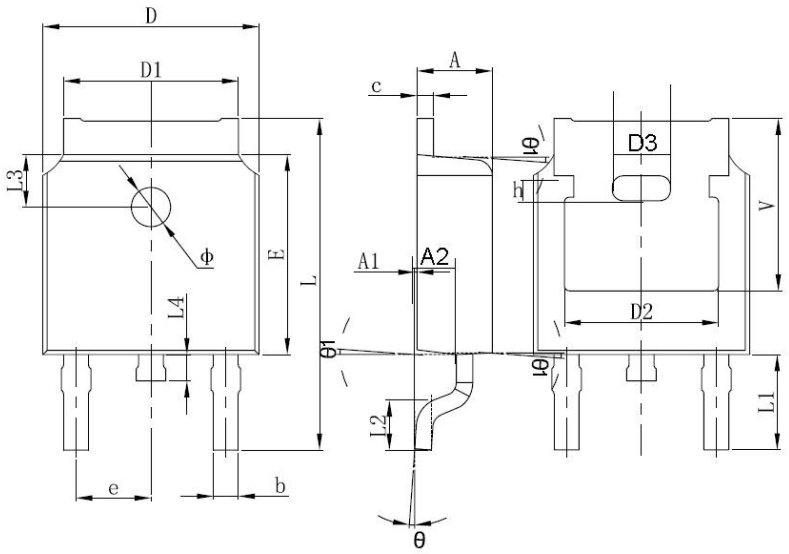

SYMBOL	Millimeters		Inches	
	Min.	Max.	Min.	Max.
A	2.20	2.40	0.087	0.094
A1	0.00	0.127	0.000	0.005
b	0.66	0.86	0.026	0.034
c	0.46	0.60	0.018	0.024
D	6.50	6.70	0.256	0.264
D1	5.13	5.46	0.202	0.215
D2	4.83 REF.		0.190 REF.	
E	6.00	6.20	0.236	0.244
e	2.186	2.386	0.086	0.094
L	9.70	10.40	0.381	0.409
L1	2.90 REF.		0.144 REF.	
L2	1.40	1.70	0.055	0.067
L3	1.60 REF.		0.063 REF.	
L4	0.60	1.00	0.024	0.039
Φ	1.10	1.30	0.043	0.051
Θ	0°	8°	0°	8°
h	0.00	0.30	0.000	0.012
V	5.35 REF.		0.211 REF.	

Mechanical Dimensions D²PAK

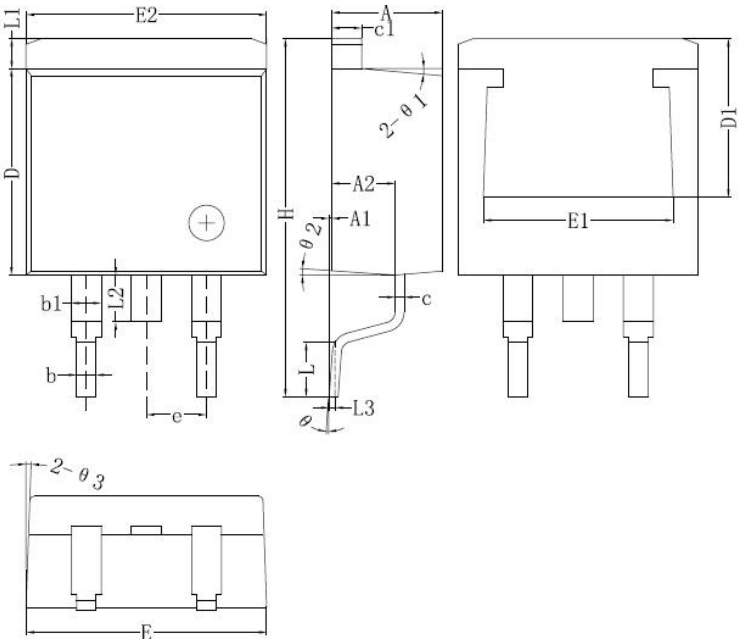

Symbol	Dimensions in millimeters		
	Min.	Typical	Max.
A	4.55	4.70	4.85
A1	0	0.10	0.25
A2	2.59	2.69	2.89
b	0.71	0.81	0.96
b1		1.27	
c	0.36	0.38	0.61
c1	1.17	1.27	1.37
D	8.55	8.70	8.85
D1	6.40		
E	10.01	10.16	10.31
E1	7.6		
E2	9.98	10.08	10.18
e		2.54	
H	14.6	15.1	15.6
L	2.00	2.30	2.70
L1	1.17	1.27	1.40
L2			2.20
L3		0.25BSC	
e	0	-	8°
e1		5°	
e2		4°	
e3		4°	

Technical Data
Data Sheet N1286, Rev. A