REVISION HISTORY				
ECO	REV	DESCRIPTION	DATE	APPROVED
-	3.2	PROD. P/L Change	03/30/16	VK

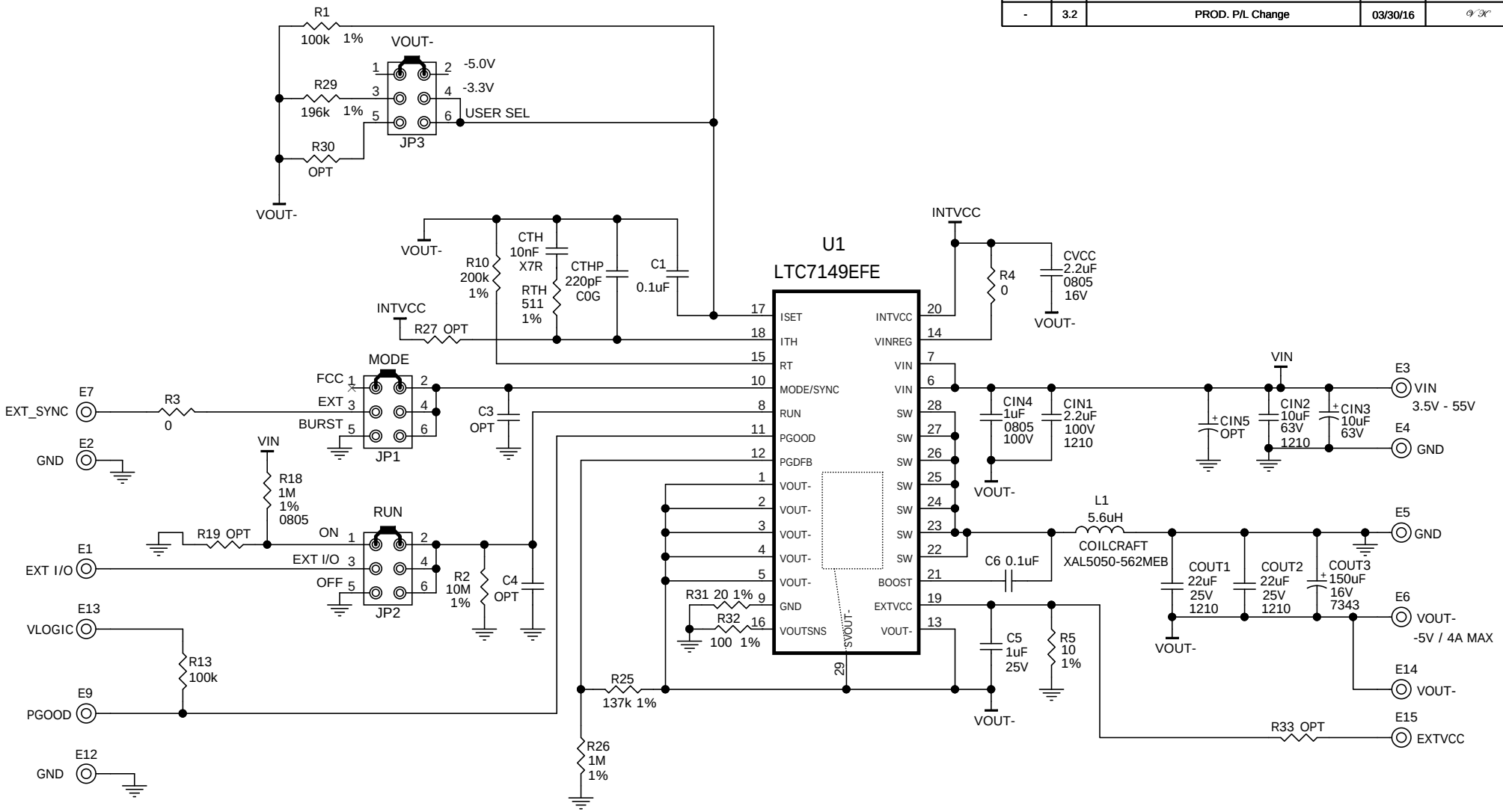

NOTES: UNLESS OTHERWISE SPECIFIED,

1. ALL CAPACITORS AND RESISTORS ARE 0603.
2. ALL RESISTORS ARE 5%.

CUSTOMER NOTICE

LINEAR TECHNOLOGY HAS MADE A BEST EFFORT TO DESIGN A CIRCUIT THAT MEETS CUSTOMER-SUPPLIED SPECIFICATIONS; HOWEVER, IT REMAINS THE CUSTOMER'S RESPONSIBILITY TO VERIFY PROPER AND RELIABLE OPERATION IN THE ACTUAL APPLICATION. COMPONENT SUBSTITUTION AND PRINTED CIRCUIT BOARD LAYOUT MAY SIGNIFICANTLY AFFECT CIRCUIT PERFORMANCE OR RELIABILITY. CONTACT LINEAR TECHNOLOGY APPLICATIONS ENGINEERING FOR ASSISTANCE.

THIS CIRCUIT IS PROPRIETARY TO LINEAR TECHNOLOGY AND SUPPLIED FOR USE WITH LINEAR TECHNOLOGY PARTS.

APPROVALS	
PCB DES.	MJ
APP ENG.	VK

SCALE = NONE

LINEAR TECHNOLOGY
1630 McCarthy Blvd.
Milpitas, CA 95035
Phone: (408)432-1900 www.linear.com
Fax: (408)434-0507

LTC CONFIDENTIAL - FOR CUSTOMER USE ONLY

TITLE: SCHEMATIC
HIGH VOLTAGE, NEGATIVE OUTPUT MONOLITHIC SYNCHRONOUS REGULATOR

SIZE	IC NO.	REV.
N/A	LTC7149EFE DEMO CIRCUIT 2354A	3.2

DATE: Wednesday, March 30, 2016 SHEET 1 OF 1