UG399: Si52258-EVB User's Guide (Using Si52258-D01-AM-QFN40-EVB)

The Si52258-EVB is used for evaluating the eight output Si52258A-D01AM Automotive grade PCIe Reference Clock Generator. The Si52258A-D01AM device uses the on-board 25 MHz crystal as reference clock source and generates 8 copies of a 100 MHz HCSL format output clock compliant to PCIe Gen 1/2/3/4/5 common clock and separate reference clock specifications.

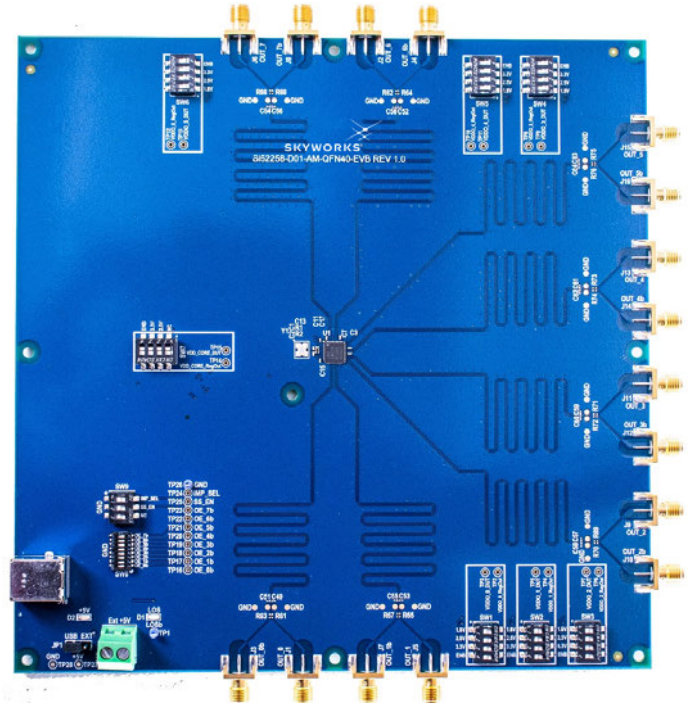

EVB FEATURES

- Powered from either USB port or external +5V power supply.
- On-board 25 MHz crystal reference.
- Programmable device core VDD supply for operation at 3.3 V, 2.5 V, or 1.8 V.
- Programmable VDDO (output driver) supplies allow each of the clock output banks to have its own power supply voltage selectable from 3.3 V, 2.5 V, or 1.8 V.
- SMA connectors for all output clocks.
- PCIe compliant spread spectrum enabled/ disabled via on-board switch.
- Internal output termination switch selectable for 100 Ω or 85 Ω operation.
- Output enable (OE) control switch per output.
- All output trace lengths matched to 10 inches.
- Loss of Signal (LOS) indication LED.

Table of Contents

1. Functional Block Diagram 3

2. Si52258-EVB Operation 4

2.1 EVB Configuration: Switches & Jumpers 4

3. LEDs 6

4. Output Clocks 7

5. Si52258-EVB Rev 1.0 Schematics 8

1. Functional Block Diagram

Below is a functional block diagram of the Si52258-EVB. The +5V required by the EVB can come from a powered USB connection (only +5V is required) or from an external +5V power supply.

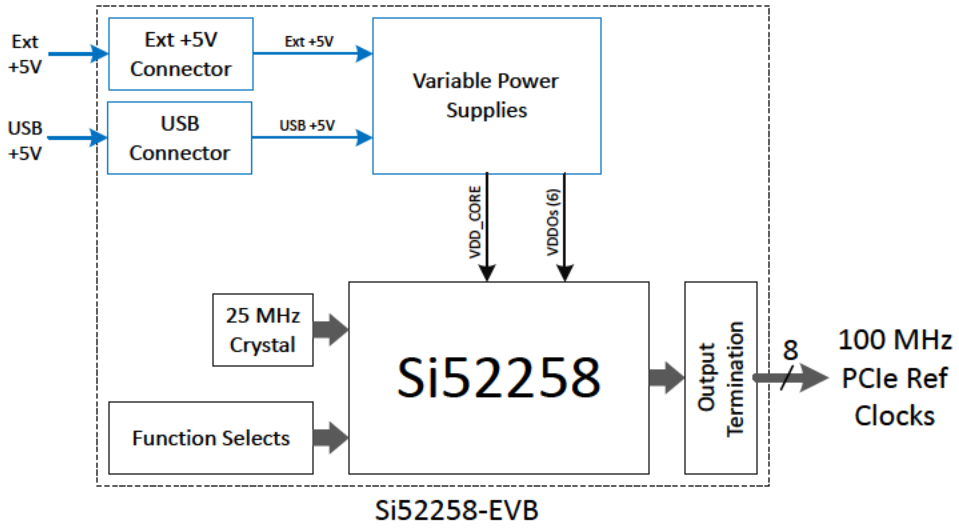

Figure 1.1. Si52258-EVB Functional Block Diagram

2. Si52258-EVB Operation

2.1 EVB Configuration: Switches & Jumpers

Power Supplies:

DIP switches SW1 – SW7 control the on-board power supplies. The table below is a guide to show how to select output voltages for each supply and the EVB default settings. Jumper JP1 selects the source of the +5V used by all the power supply regulators. JP1 jumper pin 1 to 2 selects USB as power source (default) and pin 2 to 3 selects external +5V source via J17 terminal block (refer to schematic).

Switch Position:		1	2	3	4	
DIP Switch #	Control Function	1.8V*	2.5V*	3.3V*	Enable	EVB Default
SW1	VDDO0	0	1	1	0	Enabled, +1.8V
SW2	VDDO1	0	1	1	0	Enabled, +1.8V
SW3	VDDO2	0	1	1	0	Enabled, +1.8V
SW4	VDDO3	0	1	1	0	Enabled, +1.8V
SW5	VDDO4	0	1	1	0	Enabled, +1.8V
SW6	VDDO5	0	1	1	0	Enabled, +1.8V
SW7	VDD_CORE	NC	1	1	0	Enabled, +1.8V

Note:
- 0 = Switch Position Closed (On)
- 1 = Switch Position Open (Off)

***Caution:** Only 1 voltage select switch position can be 0 (On) at a time. Do not set more than 1 position to On and only change switches with power OFF.

Output Enables:

DIP switch SW8 is used to control the clock output enables. There are 8 output enables (OE), one per output clock. The EVB default setting is all outputs enabled.

Switch Position:		1	2	3	4	5	6	7	8	
DIP Switch #	Control Function	OE_0b	OE_1b	OE_2b	OE_3b	OE_4b	OE_5b	OE_6b	OE_7b	EVB Default
SW8	Output Enables	0	0	0	0	0	0	0	0	All Enabled

Note:
- 0 = Switch Position Closed (On)
- 1 = Switch Position Open (Off)

Function Enables:

DIP switch SW9 is used to select Spread Spectrum (On or Off) and Output Termination Impedance (85 Ω or 100 Ω).

	Switch Position:	1	2	3	
DIP Switch #	Control Function	IMP_SEL	SS_EN	NC	EVB Default
SW9	Impedance	1	–	NC	Imp = 85 Ω
	Spread Spectrum	–	0	NC	SS_EN (active high) = Off

Note:
- 0 = Switch Position Closed (On)
- 1 = Switch Position Open (Off)

Location of DIP Switches:

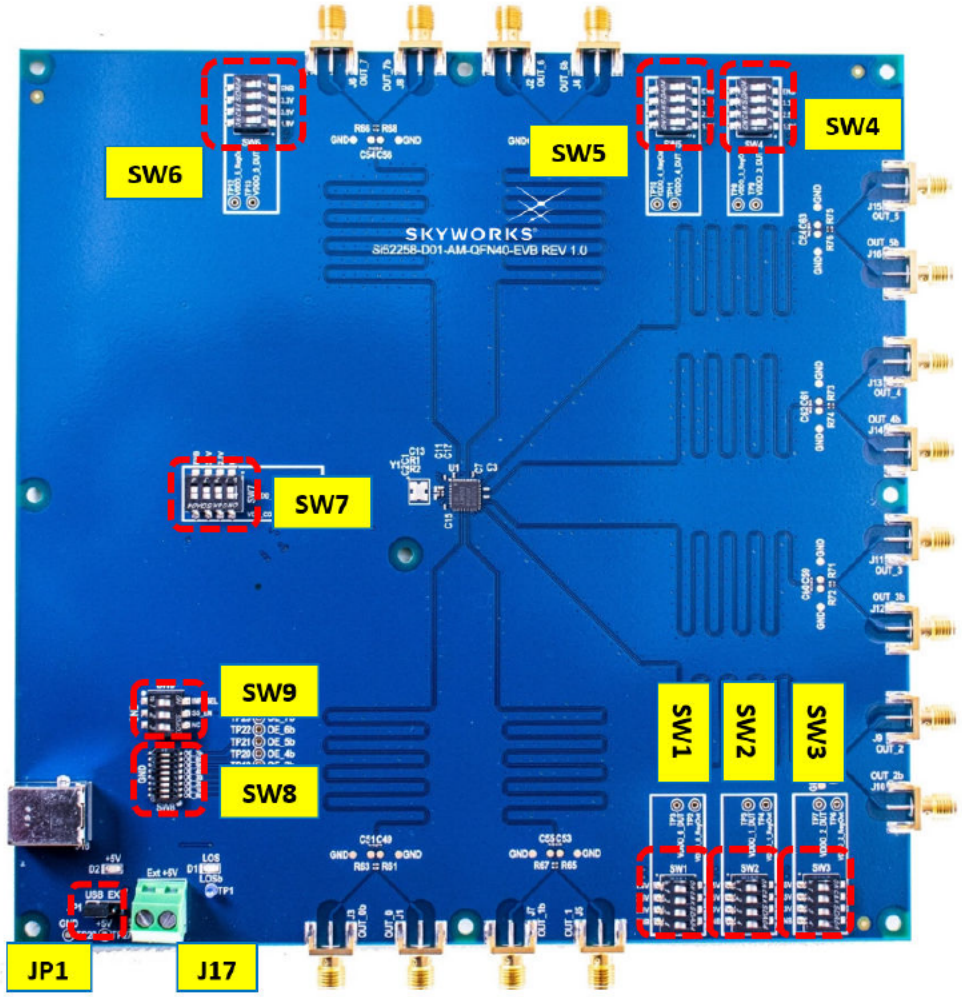

Figure 2.1. DIP Switches Location

3. LEDs

The Si52258-EVB has 2 LEDs defined below.

D2: **Blue LED** indicating +5V presence.

D3: **Red LED** indicating Loss of Signal (LOS). When lit, this LED indicates a problem was detected with the crystal or crystal oscillator circuit which is preventing proper oscillation, resulting in a loss or degradation of the input reference for the Clock Generator.

4. Output Clocks

The Si52258-EVB supports all 8 differential pair output clocks, each terminated as shown in the figure below. The EVB has locations to install 2 pf parallel termination capacitors if desired, which are tagged with “NI” in schematic to indicate they are not installed by default. The outputs are otherwise direct DC coupled to the SMA connectors. Convenient connection pads are also provided for measuring the output with a differential probe, in which case removal of the 0 Ω resistors to isolate the SMA “stub” from the transmission line is suggested.

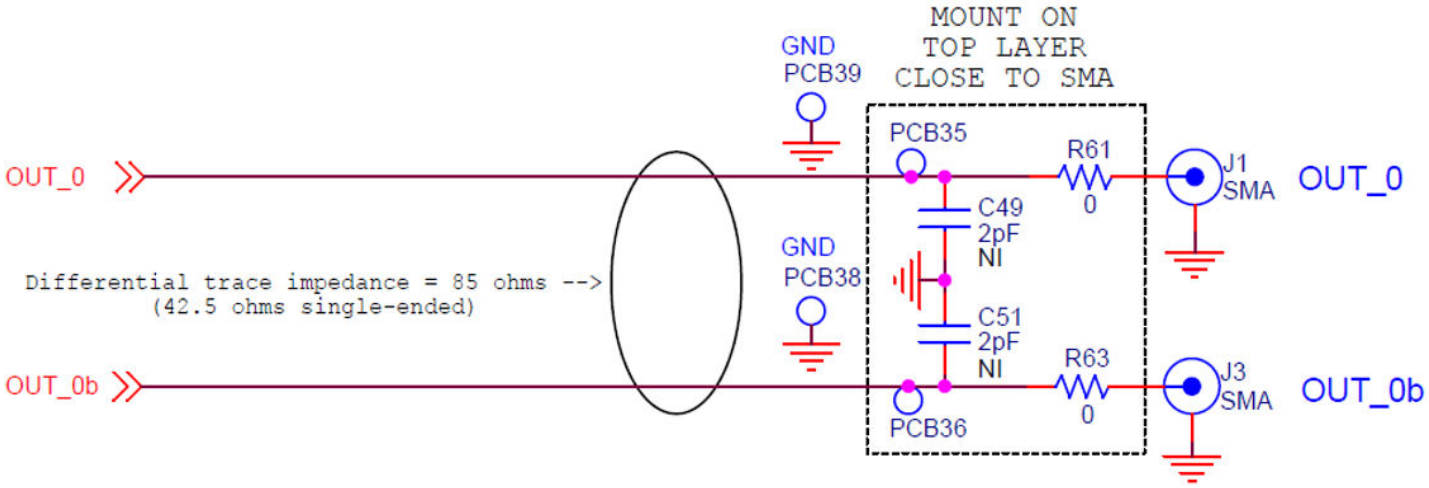

Figure 4.1. Si52258-EVB Output Clock Differential Pair Termination Circuit

5. Si52258-EVB Rev 1.0 Schematics

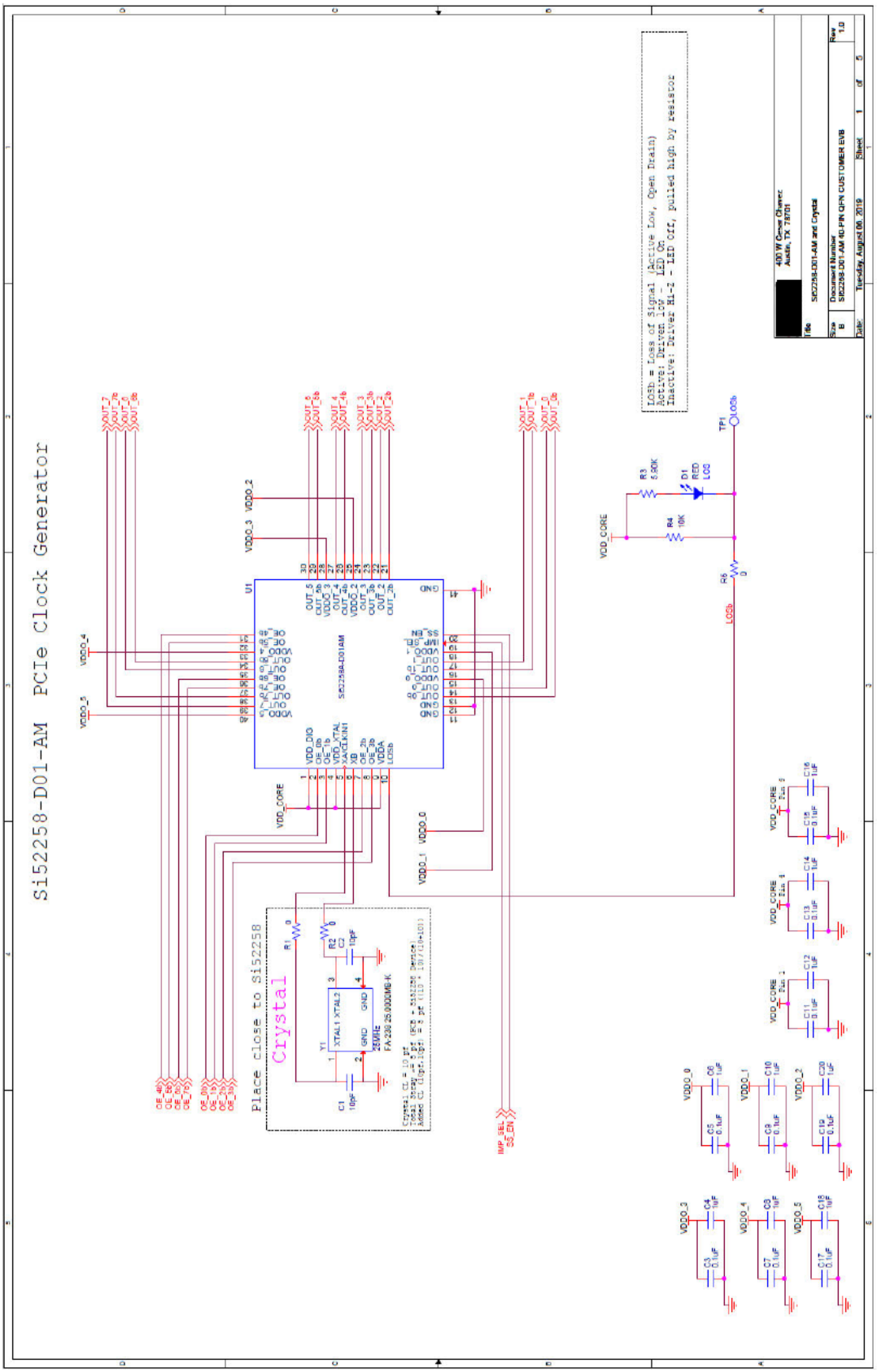

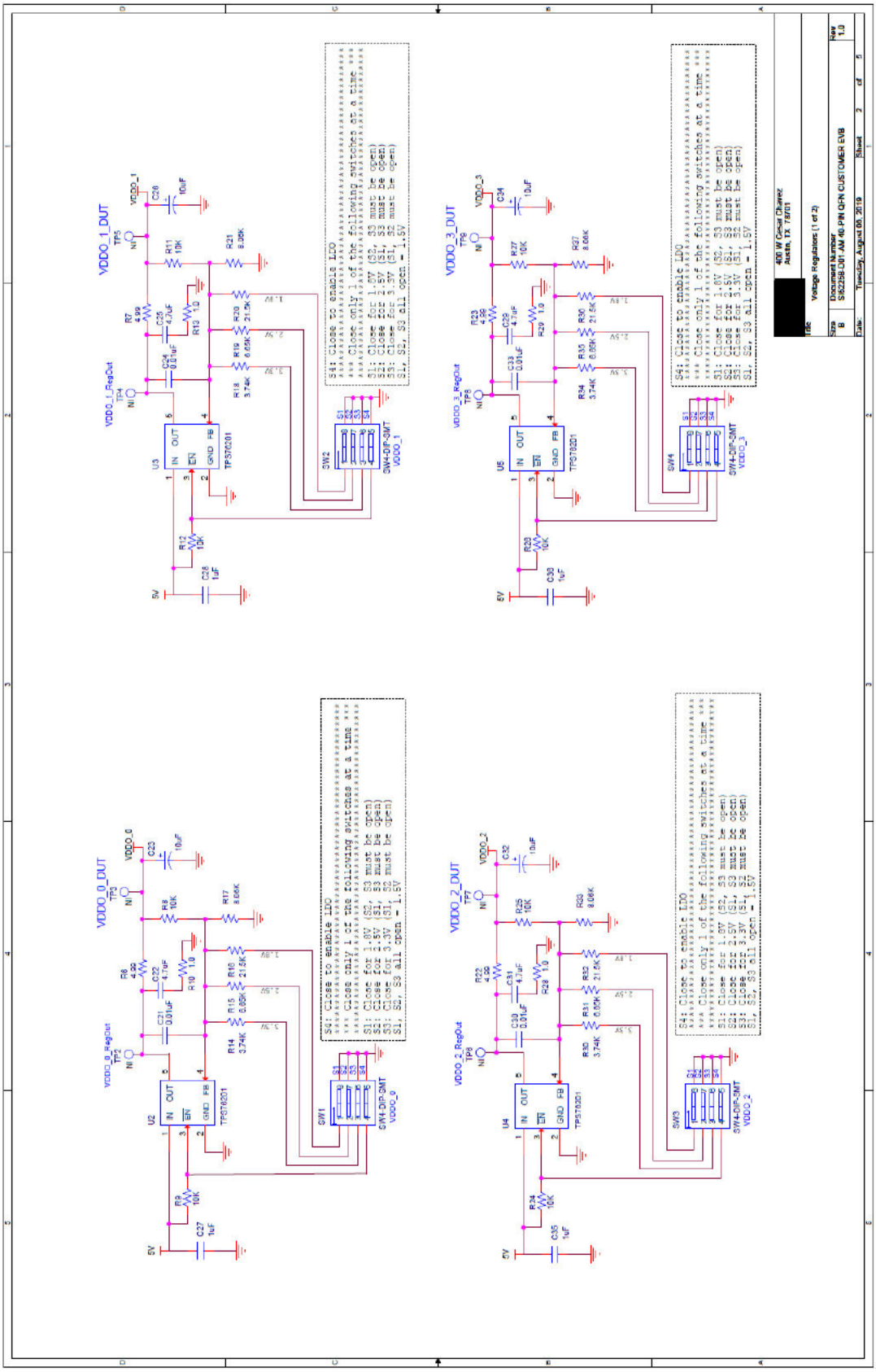
VDDO_1_DUT
VDDO_3_DUT
VDDO_0_DUT
VDDO_2_DUT
SW4-DIP-SMT
TPS76201
400 W Cesar Chavez
Austin, TX 78701
Voltage Regulators (1 of 2)
Si52258-D01-AM 40-PIN QFN CUSTOMER EVB
Tuesday, August 06, 2019

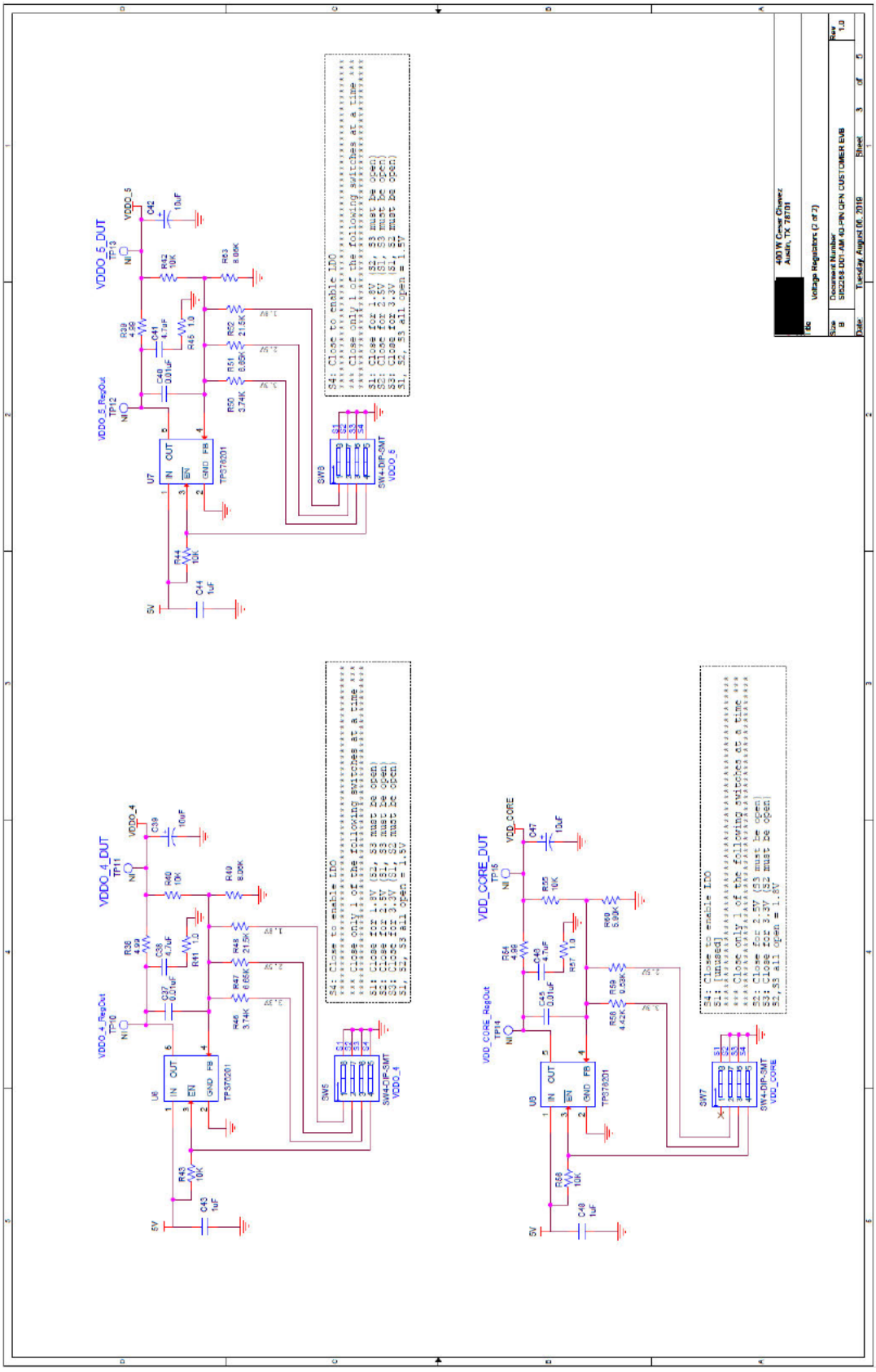
VDDO_5_DUT
VDDO_5_RegOut
VDDO_4_DUT
VDDO_4_RegOut
VDD_CORE_DUT
VDD_CORE_RegOut
TPS76201
SW4-DIP-SMT
Voltage Regulators (2 of 2)
Tuesday, August 08, 2016

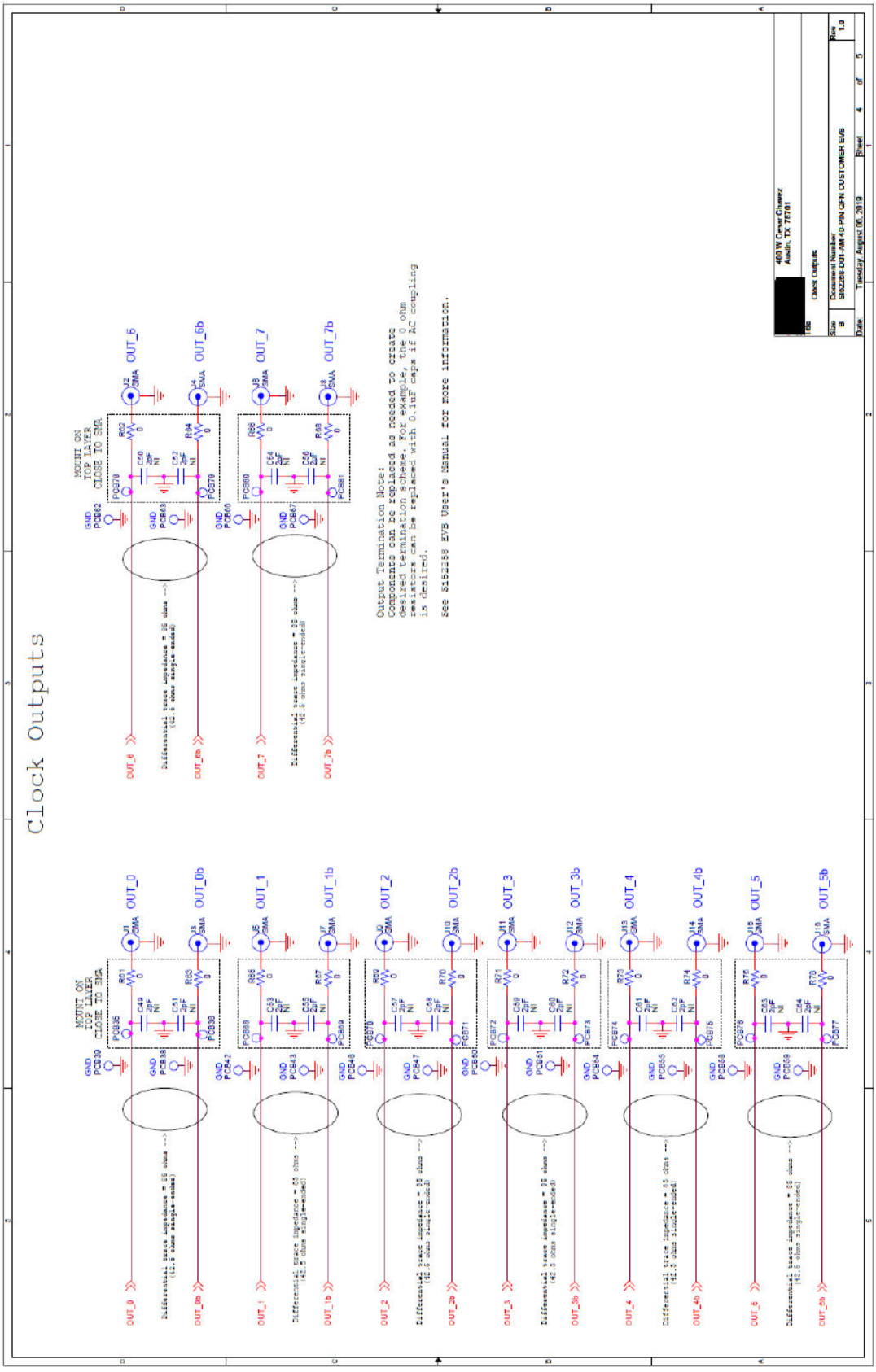
Clock Outputs
Output Termination Notes:
Components can be replaced as needed to create
desired termination scheme. For example, the 0ohm
resistors can be replaced with 0.1uF caps if AC coupling
is desired.
See Si52258 EVB User's Manual for more information.
MOUNT ON
TOP LAYER
CLOSE TO SMA
OUT_0
OUT_0b
OUT_1
OUT_1b
OUT_2
OUT_2b
OUT_3
OUT_3b
OUT_4
OUT_4b
OUT_5
OUT_5b
OUT_6
OUT_6b
OUT_7
OUT_7b
Clock Outputs
Document Number
SI52258-D01-AM 40-PIN QFN CUSTOMER EVB
Rev 1.0
Tuesday, August 06, 2019
Sheet 4 of 5

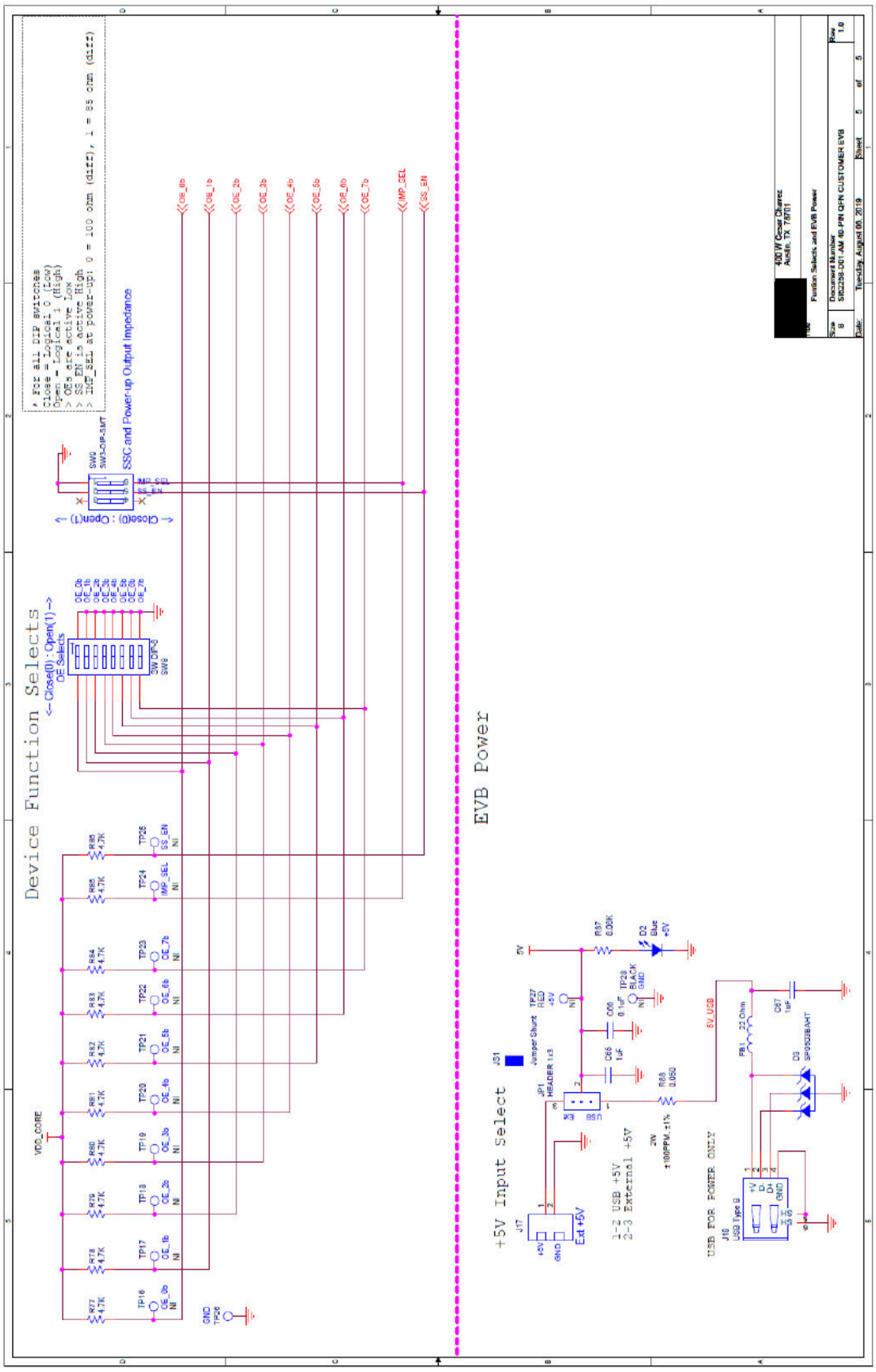
Device Function Selects
EVB Power
+5V Input Select
SSC and Power-up Output Impedance
OE Selects
USB FOR POWER ONLY
1-2 USB +5V
2-3 External +5V
Ext +5V
Function Selects and EVB Power
Document Number
Si52258-D01-AM 40-PIN QFN CUSTOMER EVB
Tuesday, August 06, 2019

SKYWORKS®

ClockBuilder Pro

Customize Skyworks clock generators, jitter attenuators and network synchronizers with a single tool. With CBPro you can control evaluation boards, access documentation, request a custom part number, export for in-system programming and more!

www.skyworksinc.com/CBPro

Portfolio
www.skyworksinc.com/ia/timing

SW/HW
www.skyworksinc.com/CBPro

Quality
www.skyworksinc.com/quality

Support & Resources
www.skyworksinc.com/support

Copyright © 2021 Skyworks Solutions, Inc. All Rights Reserved.

Information in this document is provided in connection with Skyworks Solutions, Inc. ("Skyworks") products or services. These materials, including the information contained herein, are provided by Skyworks as a service to its customers and may be used for informational purposes only by the customer. Skyworks assumes no responsibility for errors or omissions in these materials or the information contained herein. Skyworks may change its documentation, products, services, specifications or product descriptions at any time, without notice. Skyworks makes no commitment to update the materials or information and shall have no responsibility whatsoever for conflicts, incompatibilities, or other difficulties arising from any future changes.

No license, whether express, implied, by estoppel or otherwise, is granted to any intellectual property rights by this document. Skyworks assumes no liability for any materials, products or information provided hereunder, including the sale, distribution, reproduction or use of Skyworks products, information or materials, except as may be provided in Skyworks' Terms and Conditions of Sale.

THE MATERIALS, PRODUCTS AND INFORMATION ARE PROVIDED "AS IS" WITHOUT WARRANTY OF ANY KIND, WHETHER EXPRESS, IMPLIED, STATUTORY, OR OTHERWISE, INCLUDING FITNESS FOR A PARTICULAR PURPOSE OR USE, MERCHANTABILITY, PERFORMANCE, QUALITY OR NON-INFRINGEMENT OF ANY INTELLECTUAL PROPERTY RIGHT; ALL SUCH WARRANTIES ARE HEREBY EXPRESSLY DISCLAIMED. SKYWORKS DOES NOT WARRANT THE ACCURACY OR COMPLETENESS OF THE INFORMATION, TEXT, GRAPHICS OR OTHER ITEMS CONTAINED WITHIN THESE MATERIALS. SKYWORKS SHALL NOT BE LIABLE FOR ANY DAMAGES, INCLUDING BUT NOT LIMITED TO ANY SPECIAL, INDIRECT, INCIDENTAL, STATUTORY, OR CONSEQUENTIAL DAMAGES, INCLUDING WITHOUT LIMITATION, LOST REVENUES OR LOST PROFITS THAT MAY RESULT FROM THE USE OF THE MATERIALS OR INFORMATION, WHETHER OR NOT THE RECIPIENT OF MATERIALS HAS BEEN ADVISED OF THE POSSIBILITY OF SUCH DAMAGE.

Skyworks products are not intended for use in medical, lifesaving or life-sustaining applications, or other equipment in which the failure of the Skyworks products could lead to personal injury, death, physical or environmental damage. Skyworks customers using or selling Skyworks products for use in such applications do so at their own risk and agree to fully indemnify Skyworks for any damages resulting from such improper use or sale.

Customers are responsible for their products and applications using Skyworks products, which may deviate from published specifications as a result of design defects, errors, or operation of products outside of published parameters or design specifications. Customers should include design and operating safeguards to minimize these and other risks. Skyworks assumes no liability for applications assistance, customer product design, or damage to any equipment resulting from the use of Skyworks products outside of Skyworks' published specifications or parameters.

Skyworks, the Skyworks symbol, Sky5®, SkyOne®, SkyBlue™, Skyworks Green™, Clockbuilder®, DSPLL®, ISOmodem®, ProSLIC®, and SiPHY® are trademarks or registered trademarks of Skyworks Solutions, Inc. or its subsidiaries in the United States and other countries. Third-party brands and names are for identification purposes only and are the property of their respective owners. Additional information, including relevant terms and conditions, posted at www.skyworksinc.com, are incorporated by reference.

Skyworks Solutions, Inc. | Nasdaq: SWKS | sales@skyworksinc.com | www.skyworksinc.com
USA: 781-376-3000 | Asia: 886-2-2735 0399 | Europe: 33 (0)1 43548540 |