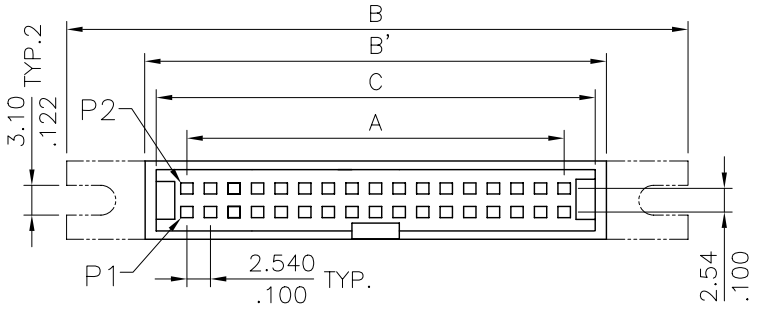

Material:

* Insulator: PBT, Glass reinforced UL 94V-0
* Contact: Brass

Ordering Code:

CA27 ** P A 9 A0

① ② ③ ④ ⑤ ⑥

① Series No.
② No. of Circuits:
③ Contact type: P= Plug
④ Plating option:
A= Selective Gold flash plated over 1.27μm(50μ") Nickel
B= Selective 0.38μm(15μ") Gold plated over 1.27μm(50μ") Nickel
C= Selective 0.76μm(30μ") Gold plated over 1.27μm(50μ") Nickel
⑤ Color: 9= Gray
⑥ Other Options:
A0= With mounting ear
B0= Without mounting ear

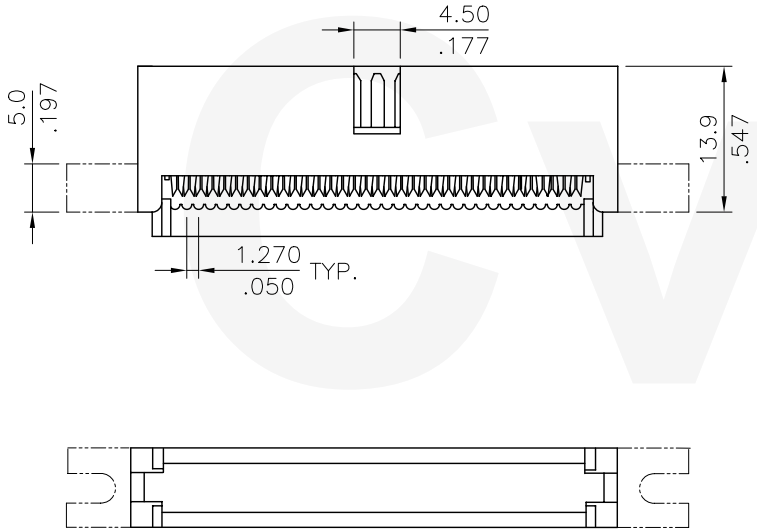

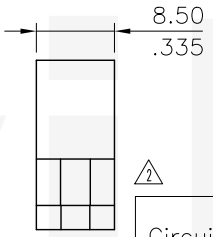

△2

Circuits	Dimension			
	A	B	B'	C
10	10.16(.400)	36.96(1.455)	21.42(.843)	18.30(.720)
14	15.24(.600)	42.04(1.655)	26.50(1.043)	23.38(.920)
16	17.78(.700)	44.58(1.755)	29.04(1.143)	25.92(1.020)
20	22.86(.900)	49.66(1.955)	34.12(1.343)	31.00(1.220)
24	27.94(1.100)	54.74(2.155)	39.20(1.543)	36.08(1.420)
26	30.48(1.200)	57.28(2.255)	41.74(1.643)	38.62(1.520)
30	35.56(1.400)	62.36(2.455)	46.82(1.843)	43.70(1.720)
34	40.64(1.600)	67.44(2.655)	51.90(2.043)	48.78(1.920)
40	48.26(1.900)	75.06(2.955)	59.52(2.343)	56.40(2.220)
50	60.96(2.400)	87.76(3.455)	72.22(2.843)	69.10(2.720)
60	73.66(2.900)	100.46(3.955)	84.92(3.343)	81.80(3.220)
64	78.74(3.100)	105.54(4.155)	90.00(3.543)	86.88(3.420)

RoHS Compliant

CVILUX CORP.
2005.06.14
ISSUED

SYM	NAME	DATE	REVISIONS
△4			
△3			
△2	SUN	6/08/05'	ECN05205/ECR05056-0
△1	SUN	6/09/04'	ECN04232/ECR04056-0

		DATE
DRAWN BY:	SUN	6/8/05'
ENGINEER:	Eisley	6/9/05'
CHECKED BY:	David	6/13/06'
APPROVED BY:	Alex	6/13/05'

UNIT: mm / inch

TOLERANCE UNLESS OTHERWISE SPECIFIED

.X ± 0.30 / .012	X.° ± 1°
.XX ± 0.20 /.008	.X° ±
.XXX ± 0.10 / .004	.XX° ±

TITLE: 2.54mm (.050") IDC BOX PIN HEADER

MATERIAL:

FINISH:

瀚荃股份有限公司
CviLux Corporation

DRAWING NO.	CA2701SF	PART NO.	CA27**P*9*0
SCALE	1 / 1	SHEET 1 OF 1	