ON Semiconductor®
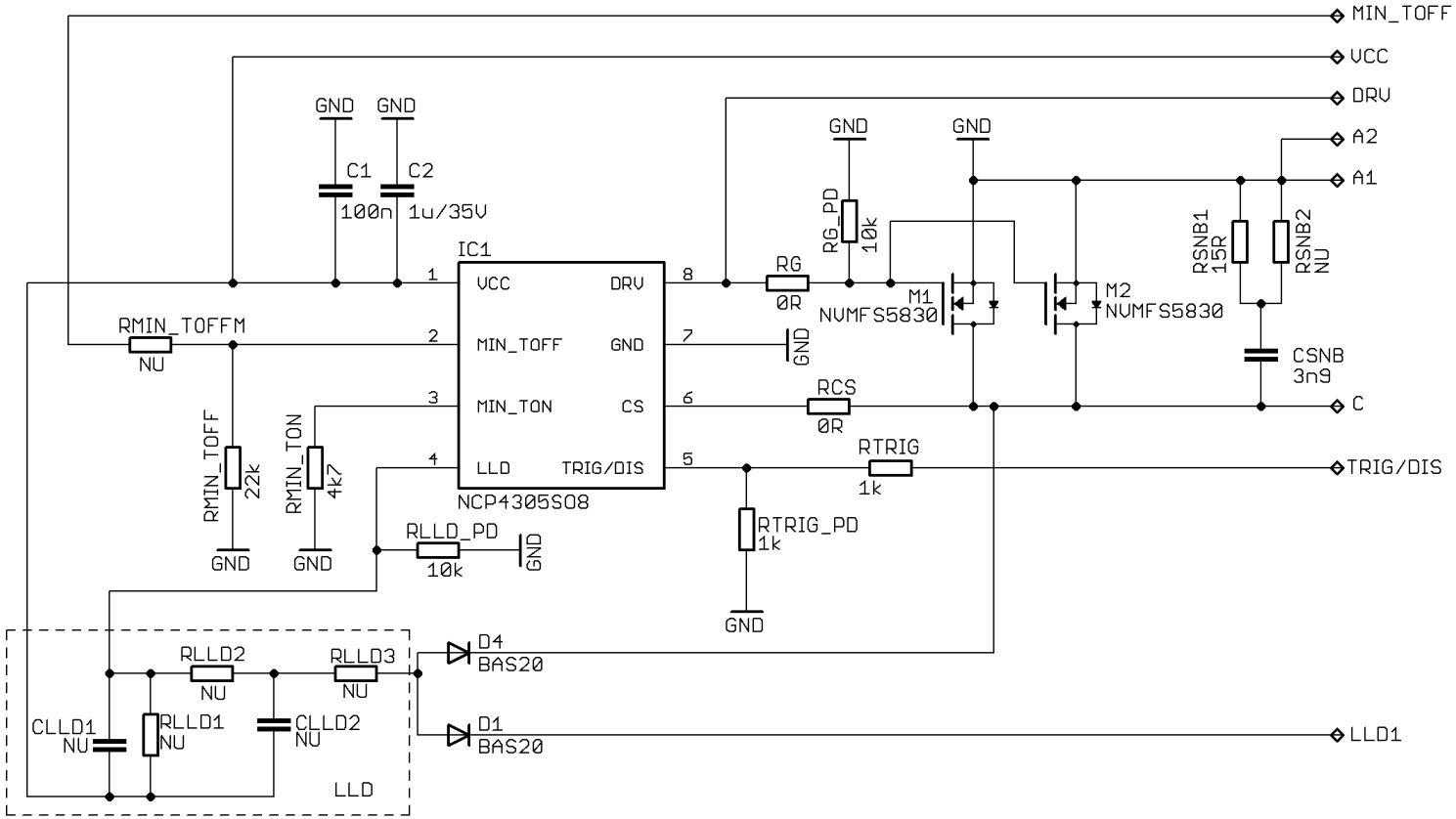
Schematic for the NCP4305LLCGEVB Evaluation Board