THIS COPY IS PROVIDED ON A RESTRICTED BASIS AND IS NOT TO BE USED IN ANY WAY DETRIMENTAL TO THE INTERESTS OF PANDUIT CORP.

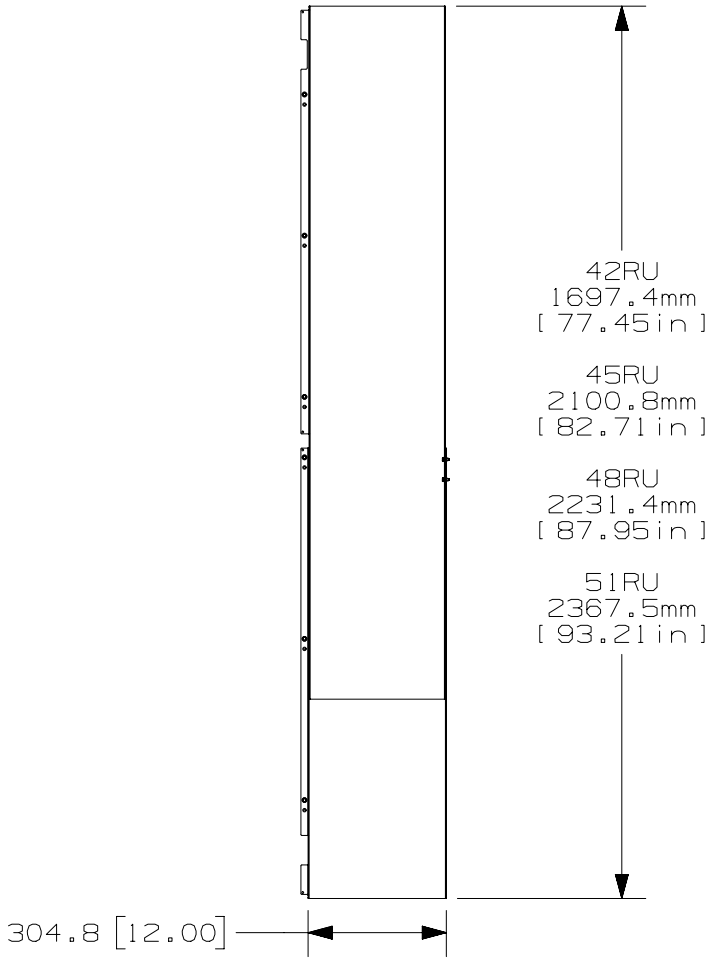

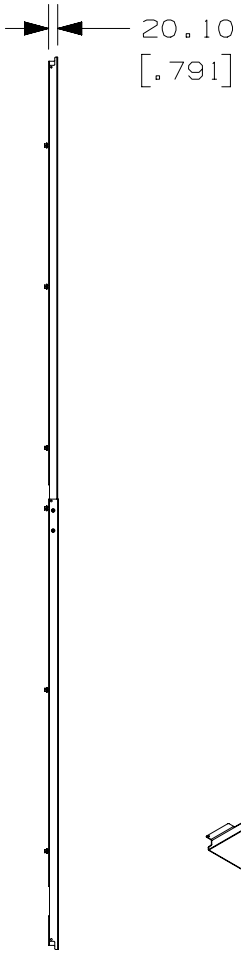

WEIGHT
18.43 LBS/EACH 8.36 Kg/EACH

NOTES:
1. VISIT OUR ON-LINE CATALOG AT WWW.PANDUIT.COM FOR A LIST OF CURRENT PARTS APPLICABLE FOR USE WITH THIS PRODUCT.
2. PARTS SUPPLIED:
   (1)- PARTIAL DEPTH SIDE PANEL
   (1)- HARDWARE KIT
   (1)- INSTRUCTION SHEET
3. COLOR: BLACK

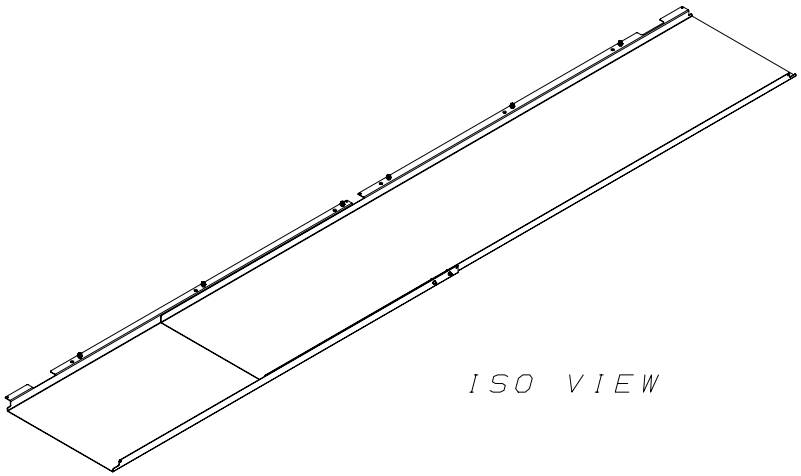

REV	DATE	BY	CHK	APR	DESCRIPTION	ECN
00A	11/3/17	MES	RAMA	ELE	RELEASED TO PRODUCITON	V09001LT/02

TITLE

PARTIAL DEPTH SIDE PANEL (SPSPNL)

CUSTOMER DRAWING

ITEM REVISION NAME: 00020NAP/00

DATASET FILE NAME: 00020NAP_DC/00A

PANDUIT

MATERIAL: N/A

THIRD ANGLE PROJECTION

DRAWING NUMBER: 00020NAP-DC

DRAWN BY	DATE	CHK	SCALE	SIZE
MES	11/3/17	RAMA	NONE	A

SHT 1 OF 1

D10100DA/16