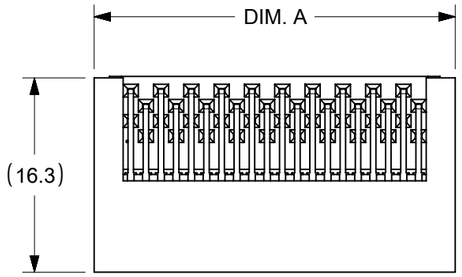


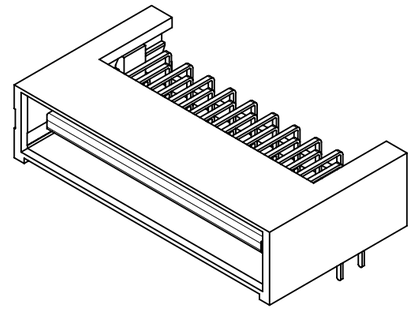

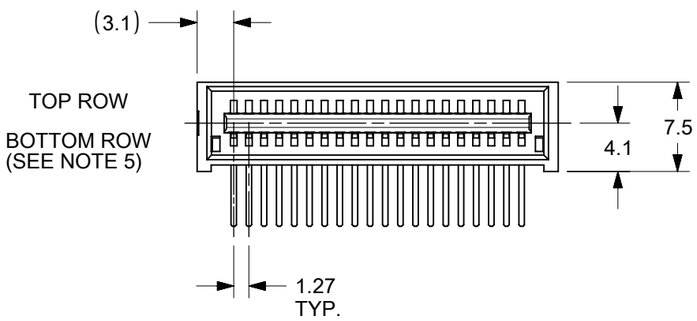


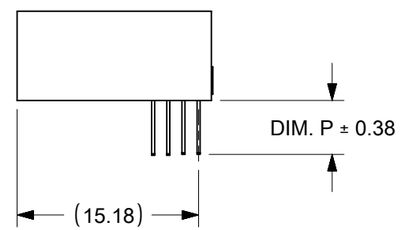


| NO OF SIGNAL | MATERIAL NUMBER | DIM A | DIM P | PCB THK |
|---|---|---|---|---|
| 12 | 45985-0111 | 12.5 | 4.50 | 3.18 |
| 16 | 45985-0121 | 15.0 | | |
| 20 | 45985-0131 | 17.6 | | |
| 24 | 45985-0141 | 20.1 | | |
| 28 | 45985-0151 | 22.6 | | |
| 32 | 45985-0161 | 25.2 | | |
| 36 | 45985-0171 | 27.7 | | |
| 40 | 45985-0181 | 30.3 | | |
| 12 | 45985-0112 | 12.5 | 3.60 | 2.36 |
| 16 | 45985-0122 | 15.0 | | |
| 20 | 45985-0132 | 17.6 | | |
| 24 | 45985-0142 | 20.1 | | |
| 28 | 45985-0152 | 22.6 | | |
| 32 | 45985-0162 | 25.2 | | |
| 36 | 45985-0172 | 27.7 | | |
| 40 | 45985-0182 | 30.3 | | |
| 12 | 45985-0113 | 12.5 | 2.90 | 1.57 |
| 16 | 45985-0123 | 15.0 | | |
| 20 | 45985-0133 | 17.6 | | |
| 24 | 45985-0143 | 20.1 | | |
| 28 | 45985-0153 | 22.6 | | |
| 32 | 45985-0163 | 25.2 | | |
| 36 | 45985-0173 | 27.7 | | |
| 40 | 45985-0183 | 30.3 | | |

NOTES:

1. MATERIAL:
   HOUSING: GLASS FILLED LCP (LIQUID CRYSTAL POLYMER); UL94V-0; COLOR: BLACK
   TERMINALS: COPPER ALLOY
2. PLATING: 0.76 MICROMETER /(30 MICROINCH) MINIMUM SELECT GOLD
   3.81 MICROMETER / (150 MICROINCH) MINIMUM SELECT TIN, BOTH OVER
   1.27 MICROMETER / (50 MICROINCH) MINIMUM NICKEL OVERALL.
3. PRODUCT SPECIFICATION: PS-45984-001.
4. PACKAGING SPECIFICATION: PK-45984-001.
5. SEE SHEET 5 FOR CIRCUIT IDENTIFICATION.
6. PARTS ARE RoHS COMPLIANT.
7. MATES WITH 45984, 46113 SERIES RECEPTACLE.

| DOCUMENT STATUS | P1 | RELEASE DATE | 2021/09/09 11:58:04 |
|---|---|---|---|

SYMBOLS: = 0 (5) = 0 (4) = 0 (3) = 0 (2) = 0 (1) = 0 = 0 = 0 = 0

THIS DRAWING CONTAINS INFORMATION THAT IS PROPRIETARY TO MOLEX ELECTRONIC TECHNOLOGIES, LLC AND SHOULD NOT BE USED WITHOUT WRITTEN PERMISSION

DIMENSION UNITS: mm
SCALE: 2:1

GENERAL TOLERANCES (UNLESS SPECIFIED)

| | MM | INCH |
|---|---|---|
| 4 PLACES | ± | ± |
| 3 PLACES | ± | ± |
| 2 PLACES | ± 0.25 | ± |
| 1 PLACE | ± | ± |
| 0 PLACES | ± | ± |
| ANGULAR TOL | ± 0.5 ° | |

DRAFT WHERE APPLICABLE MUST REMAIN WITHIN DIMENSIONS

CURRENT REV DESC: CIRCUIT NO. 1 AND 2 ON PCB ARE CORRECTED

EC NO: 676774
DRWN: CHETAB 2021/09/02
CHK'D: MBELLE 2021/09/07
APPR: HTHYAGARAJ 2021/09/09

INITIAL REVISION:
DRWN: BANDURA 5/1/2006
APPR: PATEL 5/5/2006

THIRD ANGLE PROJECTION | DRAWING: B-SIZE | SERIES: 45985

molex

LPH PLUG ASSEMBLY
SIGNAL CONNECTOR

PRODUCT CUSTOMER DRAWING

| DOCUMENT NUMBER | DOC TYPE | DOC PART | REVISION |
|---|---|---|---|
| SD-45985-483 | PSD | 001 | D1 |

| MATERIAL NUMBER | CUSTOMER | SHEET NUMBER |
|---|---|---|
| SEE CHART | GENERAL MARKET | 1 OF 5 |

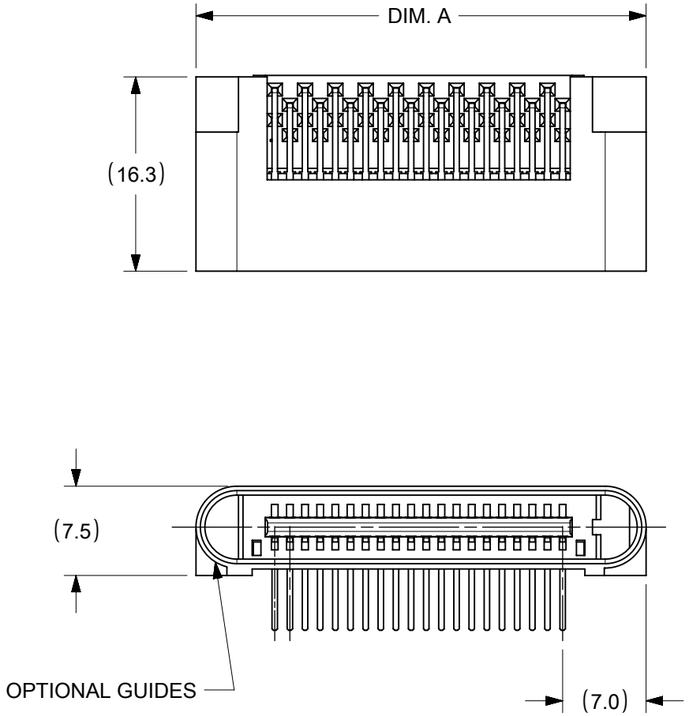


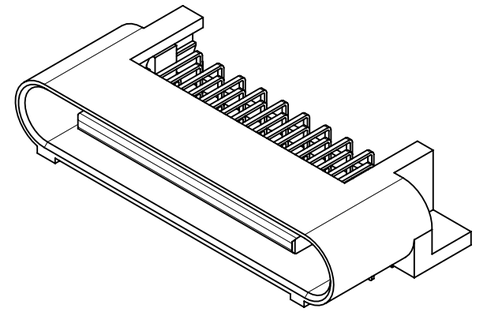

| NO OF SIGNAL | MATERIAL NUMBER | DIM A | DIM P | PCB THK |
|---|---|---|---|---|
| 12 | 45985-0211 | 19.9 | 4.50 | 3.18 |
| 16 | 45985-0221 | 22.5 | | |
| 20 | 45985-0231 | 25.0 | | |
| 24 | 45985-0241 | 27.6 | | |
| 28 | 45985-0251 | 30.1 | | |
| 32 | 45985-0261 | 32.6 | | |
| 36 | 45985-0271 | 35.2 | | |
| 40 | 45985-0281 | 37.7 | | |
| 12 | 45985-0212 | 19.9 | 3.60 | 2.36 |
| 16 | 45985-0222 | 22.5 | | |
| 20 | 45985-0232 | 25.0 | | |
| 24 | 45985-0242 | 27.6 | | |
| 28 | 45985-0252 | 30.1 | | |
| 32 | 45985-0262 | 32.6 | | |
| 36 | 45985-0272 | 35.2 | | |
| 40 | 45985-0282 | 37.7 | | |
| 12 | 45985-0213 | 19.9 | 2.90 | 1.57 |
| 16 | 45985-0223 | 22.5 | | |
| 20 | 45985-0233 | 25.0 | | |
| 24 | 45985-0243 | 27.6 | | |
| 28 | 45985-0253 | 30.1 | | |
| 32 | 45985-0263 | 32.6 | | |
| 36 | 45985-0273 | 35.2 | | |
| 40 | 45985-0283 | 37.7 | | |

SYMBOLS: = 0 (A) = 0 (B) = 0 (D) = 0 (S) = 0 ▼ = 0 (C) = 0 ☒ = 0 ■ = 0 (V) = 0

THIS DRAWING CONTAINS INFORMATION THAT IS PROPRIETARY TO MOLEX ELECTRONIC TECHNOLOGIES, LLC AND SHOULD NOT BE USED WITHOUT WRITTEN PERMISSION

DIMENSION UNITS: mm
SCALE: 2:1

GENERAL TOLERANCES (UNLESS SPECIFIED)

| | MM | INCH |
|---|---|---|
| 4 PLACES | ± | ± |
| 3 PLACES | ± | ± |
| 2 PLACES | ± 0.25 | ± |
| 1 PLACE | ± | ± |
| 0 PLACES | ± | ± |
| ANGULAR TOL | ± 0.5 ° | |

DRAFT WHERE APPLICABLE MUST REMAIN WITHIN DIMENSIONS

CURRENT REV DESC: CIRCUIT NO. 1 AND 2 ON PCB ARE CORRECTED

EC NO: 676774
DRWN: CHETAB 2021/09/02
CHK'D: MBELLE 2021/09/07
APPR: HTHYAGARAJ 2021/09/09

INITIAL REVISION:
DRWN: BANDURA 5/1/2006
APPR: PATEL 5/5/2006

THIRD ANGLE PROJECTION | DRAWING: B-SIZE | SERIES: 45985

molex

LPH PLUG ASSEMBLY
SIGNAL CONNECTOR

PRODUCT CUSTOMER DRAWING

| DOCUMENT NUMBER | DOC TYPE | DOC PART | REVISION |
|---|---|---|---|
| SD-45985-483 | PSD | 001 | D1 |

| MATERIAL NUMBER | CUSTOMER | SHEET NUMBER |
|---|---|---|
| SEE CHART | GENERAL MARKET | 2 OF 5 |

| DOCUMENT STATUS | P1 | RELEASE DATE | 2021/09/09 11:58:04 |
|---|---|---|---|

FORMAT: Eng-lega-prod-B
REVISION: D
DATE: 2018/01/18

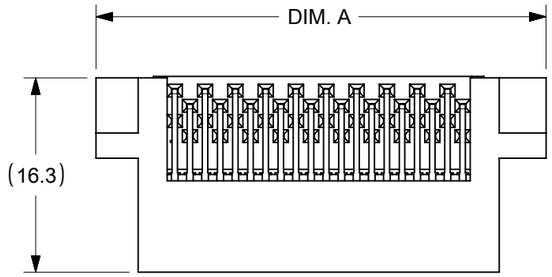


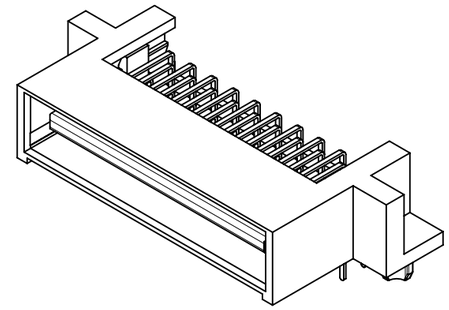

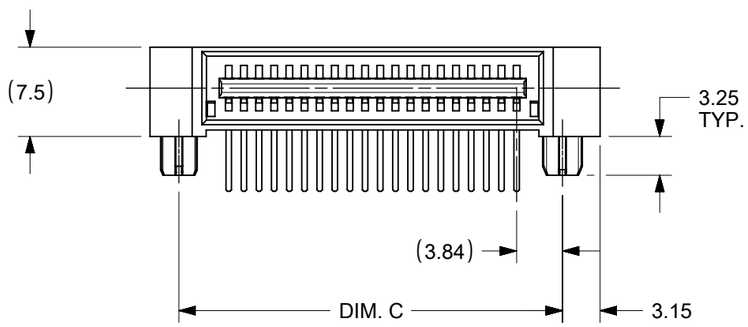


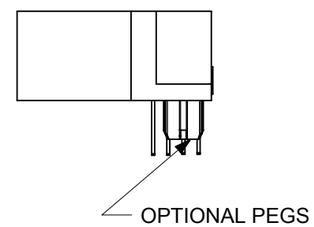


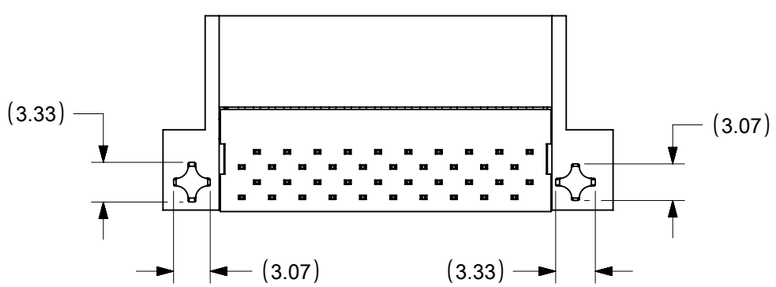


| NO OF SIGNAL | MATERIAL NUMBER | DIM A | DIM C | DIM P | PCB THK |
|---|---|---|---|---|---|
| 12 | 45985-0311 | 19.9 | 14.37 | 4.50 | 3.18 |
| 16 | 45985-0321 | 22.5 | 16.91 | | |
| 20 | 45985-0331 | 25.0 | 19.45 | | |
| 24 | 45985-0341 | 27.6 | 21.99 | | |
| 28 | 45985-0351 | 30.1 | 24.53 | | |
| 32 | 45985-0361 | 32.6 | 27.07 | | |
| 36 | 45985-0371 | 35.2 | 29.61 | | |
| 40 | 45985-0381 | 37.7 | 32.15 | | |
| 12 | 45985-0312 | 19.9 | 14.37 | 3.60 | 2.36 |
| 16 | 45985-0322 | 22.5 | 16.91 | | |
| 20 | 45985-0332 | 25.0 | 19.45 | | |
| 24 | 45985-0342 | 27.6 | 21.99 | | |
| 28 | 45985-0352 | 30.1 | 24.53 | | |
| 32 | 45985-0362 | 32.6 | 27.07 | | |
| 36 | 45985-0372 | 35.2 | 29.61 | | |
| 40 | 45985-0382 | 37.7 | 32.15 | | |
| 12 | 45985-0313 | 19.9 | 14.37 | 2.90 | 1.57 |
| 16 | 45985-0323 | 22.5 | 16.91 | | |
| 20 | 45985-0333 | 25.0 | 19.45 | | |
| 24 | 45985-0343 | 27.6 | 21.99 | | |
| 28 | 45985-0353 | 30.1 | 24.53 | | |
| 32 | 45985-0363 | 32.6 | 27.07 | | |
| 36 | 45985-0373 | 35.2 | 29.61 | | |
| 40 | 45985-0383 | 37.7 | 32.15 | | |

SYMBOLS: 5 = 0; 4 = 0; 3 = 0; 5 = 0; ▼ = 0; 2 = 0; ☒ = 0; ■ = 0; 1 = 0

THIS DRAWING CONTAINS INFORMATION THAT IS PROPRIETARY TO MOLEX ELECTRONIC TECHNOLOGIES, LLC AND SHOULD NOT BE USED WITHOUT WRITTEN PERMISSION

DIMENSION UNITS: mm
SCALE: 2:1

GENERAL TOLERANCES (UNLESS SPECIFIED)

| | MM | INCH |
|---|---|---|
| 4 PLACES | ± | ± |
| 3 PLACES | ± | ± |
| 2 PLACES | ± 0.25 | ± |
| 1 PLACE | ± | ± |
| 0 PLACES | ± | ± |
| ANGULAR TOL | ± 0.5 ° | |

DRAFT WHERE APPLICABLE MUST REMAIN WITHIN DIMENSIONS

CURRENT REV DESC: CIRCUIT NO. 1 AND 2 ON PCB ARE CORRECTED

EC NO: 676774
DRWN: CHETAB 2021/09/02
CHK'D: MBELLE 2021/09/07
APPR: HTHYAGARAJ 2021/09/09

INITIAL REVISION:
DRWN: BANDURA 5/1/2006
APPR: PATEL 5/5/2006

THIRD ANGLE PROJECTION | DRAWING: B-SIZE | SERIES: 45985

molex

LPH PLUG ASSEMBLY
SIGNAL CONNECTOR

PRODUCT CUSTOMER DRAWING

| DOCUMENT NUMBER | DOC TYPE | DOC PART | REVISION |
|---|---|---|---|
| SD-45985-483 | PSD | 001 | D1 |

| MATERIAL NUMBER | CUSTOMER | SHEET NUMBER |
|---|---|---|
| SEE CHART | GENERAL MARKET | 3 OF 5 |

| DOCUMENT STATUS | P1 | RELEASE DATE | 2021/09/09 11:58:04 |
|---|---|---|---|

FORMAT: Eng-lega-mechanical-prod-B
REVISION: D
DATE: 2018/01/18

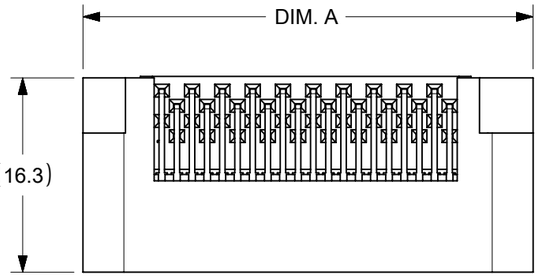


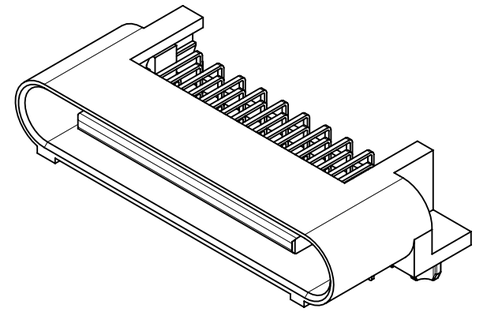

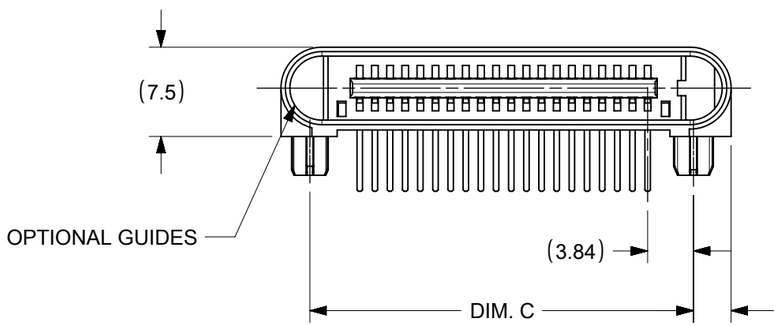


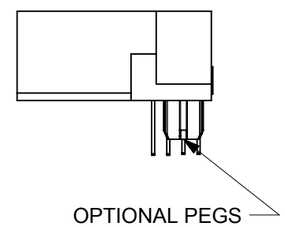


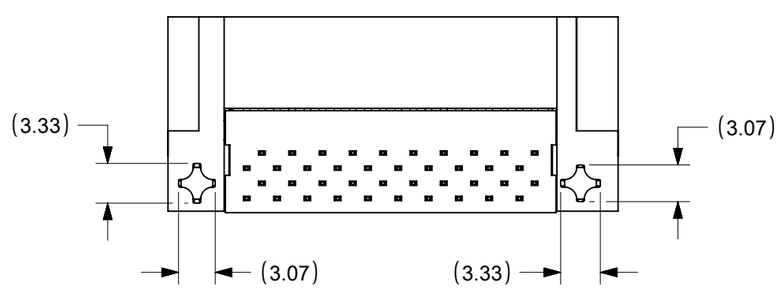


| NO OF SIGNAL | MATERIAL NUMBER | DIM A | DIM C | DIM P | PCB THK |
|---|---|---|---|---|---|
| 12 | 45985-0411 | 19.9 | 14.37 | 4.50 | 3.18 |
| 16 | 45985-0421 | 22.5 | 16.91 | | |
| 20 | 45985-0431 | 25.0 | 19.45 | | |
| 24 | 45985-0441 | 27.6 | 21.99 | | |
| 28 | 45985-0451 | 30.1 | 24.53 | | |
| 32 | 45985-0461 | 32.6 | 27.07 | | |
| 36 | 45985-0471 | 35.2 | 29.61 | | |
| 40 | 45985-0481 | 37.7 | 32.15 | | |
| 12 | 45985-0412 | 19.9 | 14.37 | 3.60 | 2.36 |
| 16 | 45985-0422 | 22.5 | 16.91 | | |
| 20 | 45985-0432 | 25.0 | 19.45 | | |
| 24 | 45985-0442 | 27.6 | 21.99 | | |
| 28 | 45985-0452 | 30.1 | 24.53 | | |
| 32 | 45985-0462 | 32.6 | 27.07 | | |
| 36 | 45985-0472 | 35.2 | 29.61 | | |
| 40 | 45985-0482 | 37.7 | 32.15 | | |
| 12 | 45985-0413 | 19.9 | 14.37 | 2.90 | 1.57 |
| 16 | 45985-0423 | 22.5 | 16.91 | | |
| 20 | 45985-0433 | 25.0 | 19.45 | | |
| 24 | 45985-0443 | 27.6 | 21.99 | | |
| 28 | 45985-0453 | 30.1 | 24.53 | | |
| 32 | 45985-0463 | 32.6 | 27.07 | | |
| 36 | 45985-0473 | 35.2 | 29.61 | | |
| 40 | 45985-0483 | 37.7 | 32.15 | | |

SYMBOLS: F = 0, E = 0, D = 0, S = 0, ▼ = 0, C = 0, ☒ = 0, ■ = 0, V = 0

THIS DRAWING CONTAINS INFORMATION THAT IS PROPRIETARY TO MOLEX ELECTRONIC TECHNOLOGIES, LLC AND SHOULD NOT BE USED WITHOUT WRITTEN PERMISSION

DIMENSION UNITS: mm
SCALE: 2:1

GENERAL TOLERANCES (UNLESS SPECIFIED)

| | MM | INCH |
|---|---|---|
| 4 PLACES | ± | ± |
| 3 PLACES | ± | ± |
| 2 PLACES | ± 0.25 | ± |
| 1 PLACE | ± | ± |
| 0 PLACES | ± | ± |
| ANGULAR TOL | ± 0.5 ° | |

DRAFT WHERE APPLICABLE MUST REMAIN WITHIN DIMENSIONS

CURRENT REV DESC: CIRCUIT NO. 1 AND 2 ON PCB ARE CORRECTED

EC NO: 676774
DRWN: CHETAB 2021/09/02
CHK'D: MBELLE 2021/09/07
APPR: HTHYAGARAJ 2021/09/09

INITIAL REVISION:
DRWN: BANDURA 5/1/2006
APPR: PATEL 5/5/2006

THIRD ANGLE PROJECTION | DRAWING: B-SIZE | SERIES: 45985

molex

LPH PLUG ASSEMBLY
SIGNAL CONNECTOR

PRODUCT CUSTOMER DRAWING

| DOCUMENT NUMBER | DOC TYPE | DOC PART | REVISION |
|---|---|---|---|
| SD-45985-483 | PSD | 001 | D1 |

| MATERIAL NUMBER | CUSTOMER | SHEET NUMBER |
|---|---|---|
| SEE CHART | GENERAL MARKET | 4 OF 5 |

| DOCUMENT STATUS | P1 | RELEASE DATE | 2021/09/09 11:58:04 |
|---|---|---|---|

FORMAT: Eng-lega-master-prod-B
REVISION: D
DATE: 2018/01/18

| NO OF SIGNAL | DIM C |
|---|---|
| 12 | 14.37 |
| 16 | 16.91 |
| 20 | 19.45 |
| 24 | 21.99 |
| 28 | 24.53 |
| 32 | 27.07 |
| 36 | 29.61 |
| 40 | 32.15 |

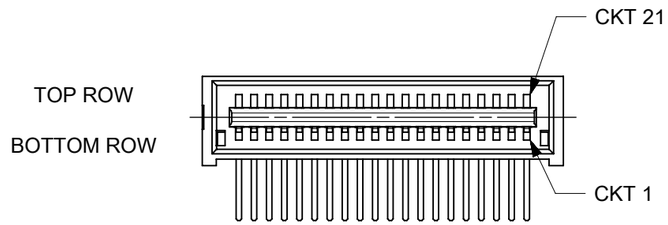


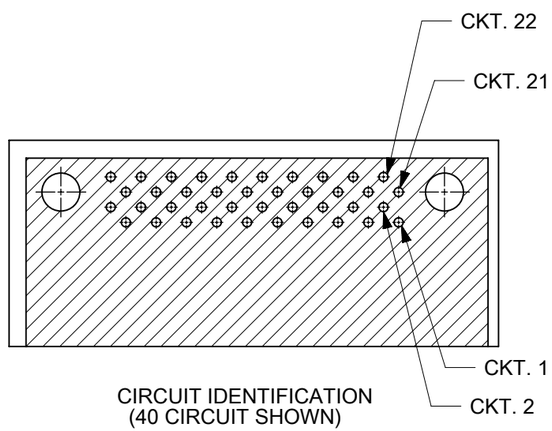


CIRCUIT IDENTIFICATION
(40 CIRCUIT SHOWN)

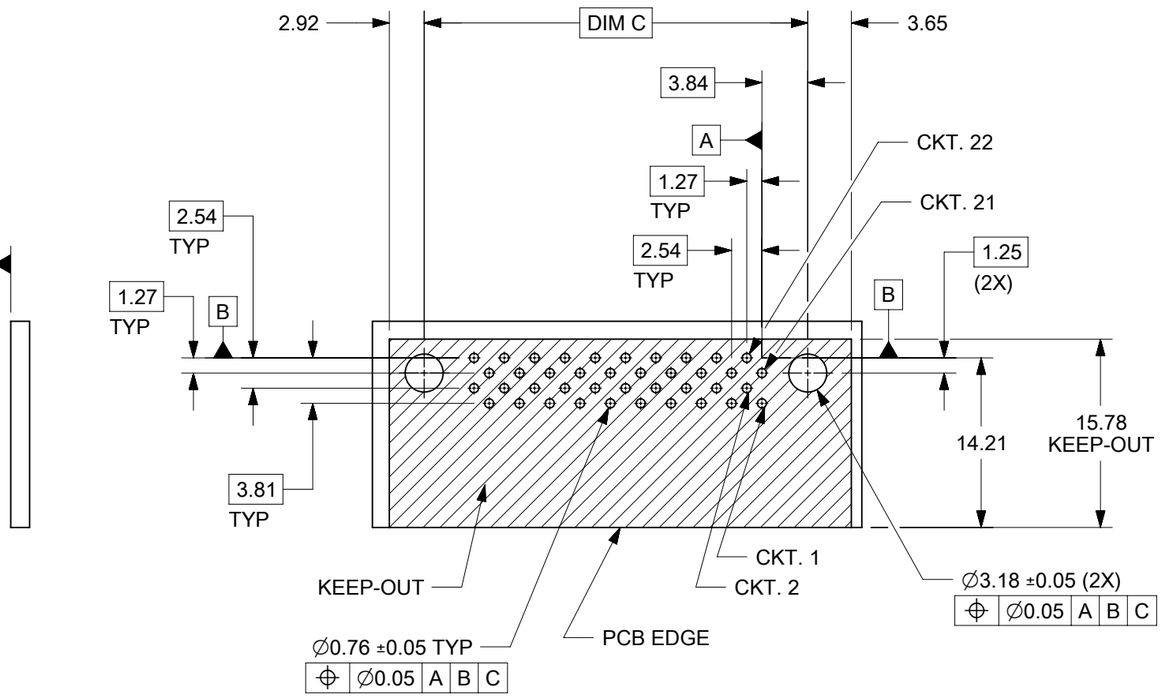


RECOMMENDED PCB LAYOUT
SHOWN FROM COMPONENT SIDE

| SYMBOLS | |
|---|---|
| E A | = 0 |
| E | = 0 |
| E B | = 0 |
| S | = 0 |
| ▼ | = 0 |
| C | = 0 |
| ☒ | = 0 |
| ■ | = 0 |
| ▽ | = 0 |

THIS DRAWING CONTAINS INFORMATION THAT IS PROPRIETARY TO MOLEX ELECTRONIC TECHNOLOGIES, LLC AND SHOULD NOT BE USED WITHOUT WRITTEN PERMISSION

| DIMENSION UNITS | SCALE |
|---|---|
| mm | 2:1 |

GENERAL TOLERANCES (UNLESS SPECIFIED)

| | MM | INCH |
|---|---|---|
| 4 PLACES | ± | ± |
| 3 PLACES | ± | ± |
| 2 PLACES | ± 0.25 | ± |
| 1 PLACE | ± | ± |
| 0 PLACES | ± | ± |
| ANGULAR TOL | ± 0.5 ° | |

DRAFT WHERE APPLICABLE MUST REMAIN WITHIN DIMENSIONS

CURRENT REV DESC: CIRCUIT NO. 1 AND 2 ON PCB ARE CORRECTED

EC NO: 676774
DRWN: CHETAB 2021/09/02
CHK'D: MBELLE 2021/09/07
APPR: HTHYAGARAJ 2021/09/09

INITIAL REVISION:
DRWN: BANDURA 5/1/2006
APPR: PATEL 5/5/2006

THIRD ANGLE PROJECTION | DRAWING: B-SIZE | SERIES: 45985

molex

LPH PLUG ASSEMBLY
SIGNAL CONNECTOR

PRODUCT CUSTOMER DRAWING

| DOCUMENT NUMBER | DOC TYPE | DOC PART | REVISION |
|---|---|---|---|
| SD-45985-483 | PSD | 001 | D1 |

| MATERIAL NUMBER | CUSTOMER | SHEET NUMBER |
|---|---|---|
| SEE CHART | GENERAL MARKET | 5 OF 5 |

| DOCUMENT STATUS | P1 | RELEASE DATE | 2021/09/09 11:58:04 |
|---|---|---|---|

FORMAT: Eng-lega-prod-prod-B
REVISION: D
DATE: 2018/01/18