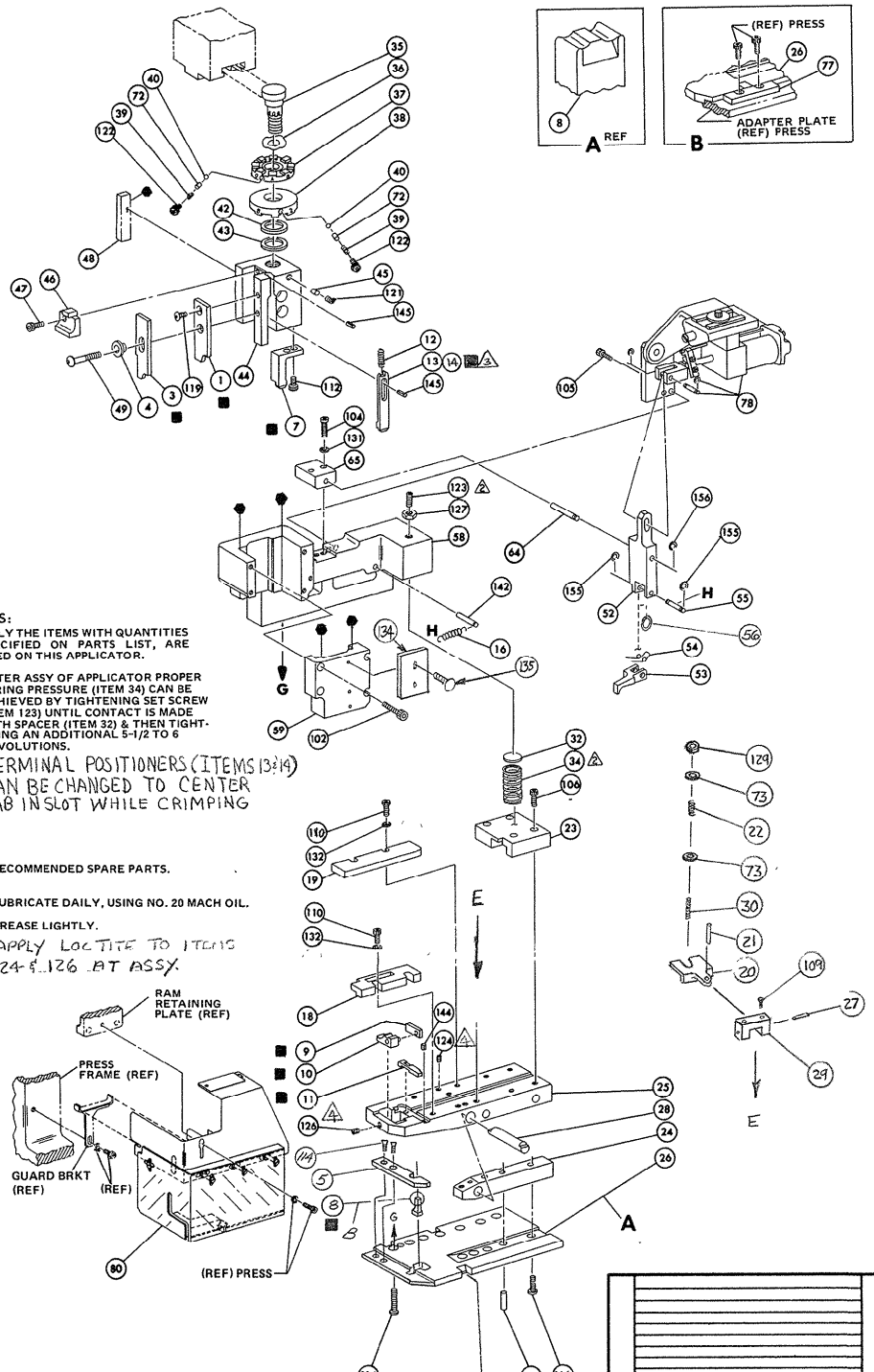

NOTES:

1. ONLY THE ITEMS WITH QUANTITIES SPECIFIED ON PARTS LIST, ARE USED ON THIS APPLICATOR.

2. AFTER ASSY OF APPLICATOR PROPER SPRING PRESSURE (ITEM 34) CAN BE ACHIEVED BY TIGHTENING SET SCREW (ITEM 123) UNTIL CONTACT IS MADE WITH SPACER (ITEM 32) & THEN TIGHTENING AN ADDITIONAL 5-1/2 TO 6 REVOLUTIONS.

3. TERMINAL POSITIONERS (ITEMS 13 & 14) CAN BE CHANGED TO CENTER TAB IN SLOT WHILE CRIMPING

KEY:

■ — RECOMMENDED SPARE PARTS.

▼ — LUBRICATE DAILY, USING NO. 20 MACH OIL.

⬢ — GREASE LIGHTLY.

4. APPLY LOCTITE TO ITEMS 124 & 126 AT ASSY.

REQ.	PART NO.	DESCRIPTION	NO.	REQ.	PART NO.	DESCRIPTION	NO.
			162				71
			161				70
			160				69
			159				68
			158				67
			157				66
1	1- 21986-2	RING RET "E" (3/16 DIA) PIVOT ARM	156	1	456987-1	BLOCK, PIVOT	65
2	21045-3	RING RET "C" (3/16 DIA) FEED PIN	155	1	457058-1	PIN, PIVOT	64
			154				63
			153				62
			152				61
			151				60
			150	1	455164-1	CAP, HOUSING	59
			149	1	457079-1	HOUSING	58
			148				57
			147	1	25745-1	RING, SPLIT	56
			146	1	240624-1	PIN, FEED FINGER	55
2	4- 21028-9	PIN SLOT SPG (1/8 DIA X .38) RAM	145	1	691499-1	SPRING, FEED FINGER	54
1	3- 21028-2	PIN, SLOT SPG (3/32 DIA X .25) REAR SHEAR PL	144	1	454566-1	FINGER, FEED	53
			143	1	457057-1	ARM, PIVOT	52
1	4-22183-0	PIN, GROVE (.187 DIA X 1.50) FD RETURN SPG	142				51
			141				50
			140	1	3-21002-5	BOLT, CRIMPER	49
			139				48
1	21029-3	PIN, SLOTTED (3/16 DIA X .75) BASE PLATE	138	1	22353-8	SCREW, SHOULDER	47
			137	1	690578-1	BLOCK, INSUL ADJUSTMENT	46
			136	1	690191-1	PLUG, NYLON	45
2	21017-2	SCR, DRIVE #2 X .19	135	1	454574-1	RAM	44
1	461264-1	PLATE, IDENTIFICATION	134	1	690125-1	WASHER, LAMINATED	43
~~4~~	~~1- 21899-3~~	~~WASHER, FLAT (NO. 8) DRAG STUD & STR GDS~~	133	1	690124-1	WASHER, RAM	42
4	21024-4	WASHER, LOCK (No. 8) STRIP GUIDE	132				41
2	21024-5	WASHER, LOCK (No. 10) PIVOT BLOCK	131	2	23241-6	BALL, STEEL	40
			130	2	690170-1	SPRING, DISC.	39
1	21022-3	NUT, HEX (SLF LKG)(10-32) DRAG STUD	129	1	690142-1	DISC., INSULATION	38
			128	1	8-6906924	DISC., WIRE	37
1	1- 22202-7	NUT, HEX MACH (5/16-24) SPRING HOUSING	127	1	22480-5	WASHER, SPRING	36
1	21061-9	SCREW, SKT SET (8-32 X .25) ANVIL INSERT	126	1	690212-1	POST, RAM	35
~~2~~	~~3- 21012-1~~	~~SCREW, SKT SET (6-32 X .38) DRAG~~	125	1	3- 23846-5	SPRING, HINGE BAR △2	34
2	4- 21008-0	SCREW, SKT SET (8-32 X .25) HINGE PIN	124				33
1	8- 21007-5	SCREW, SKT SET (5/16-24 X .75) SPRING HOUSING	123	1	690573-1	SPACER, SPRING	32
2	23030-1	SCREW, SKT HD CAP (NYLOK) (6-32 x .25) C.P. DISC.	122				31
1	21009-2	SCREW, SKT SET (1/4-20 X .25) C.P. RAM	121	1	1-22354-8	STUD, DRAG	30
			120	1	454569-1	DRAG, MOUNT	29
1	2- 21002-1	SCREW, BTN HD SKT CAP (8-32 X .38) CRIMPER	119	1	690582-1	PIN, HINGE	28
			118	1	21030-2	DRAG, SPRING MOUNT	27
~~3~~	~~3- 21002-4~~	~~SCREW, BTN HD SKT CAP (1/4-20 X .62) BLK STAB~~	117	1	684905-1	PLATE, BASE	26
7	2-22733-8	SCREW, BTN HD SKT CAP (1/4-20 X .75) HOUSING	116	1	454579-2	BAR, HINGE	25
			115	1	690571-1	BLOCK, STABILIZER	24
2	7-21000-6	SCREW, SKT HD CAP (10-32 X .31) ANVIL RET. PL.	114	1	690585-1	BLOCK, PRESSURE	23
			113	1	22282-5	SPRING, DRAG	22
2	1-23030-1	SCREW, SKT HD CAP (8-32 x .62) NYLOK, SL BLADE	112	1	21030-6	LEVER, DRAG	21
			111	1	454570-1	DRAG, STOCK	20
4	2- 22603-3	SCREW, HEX HD CAP (8-32 X .63) FR STRIP GUIDE	110	1	454573-1	GUIDE, STRIP, REAR	19
2	2- 21000-8	SCREW, SKT HD CAP (8-32 X .62) REAR STRIP GD	109	1	454571-1	GUIDE, STRIP, FRONT	18
			108				17
			107	1	2- 22287-6	SPRING, FEED RETURN	16
4	2- 21000-9	SCREW, SKT HD CAP (8-32 X .75) PRESS BLOCK	106				15
2	21001-3	SCREW, SKT HD CAP (1/4-20 X .62) AIR FD ASSY	105	1	692134-6	POSITIONER, TERMINAL △3 ■	14
2	3- 21000-8	SCREW, SKT HD CAP (10-32 X .88) PIVOT BLOCK	104	1	1-692134-6	POSITIONER, TERMINAL △3 ■	13
			103	1	5- 22280-5	SPRING, TERM. POSITIONER	12
4	3- 21000-8	SCREW, SKT HD CAP (10-32 X .88) HSG CAP	102	1	454711-1	PLATE, REAR SHEAR ■	11
			101	1	454710-1	INSERT, ANVIL ■	10
1	457244-2	GUARD ASSEMBLY	80	1	1-690569-1	PLATE, FRONT SHEAR ■	9
			79	1	6907161-1	ANVIL ■	8
1	457098-1	AIR FEED ASSEMBLY	78	1	454575-4	BLADE, SLUG ■	7
1	694427-1	PLATE, APPLICATOR, MOUNTING	77				6
			76	1	684906-1	PLATE, ANVIL RETAINING	5
			75	1	690574-1	SPACER TUBULAR, INSUL CRIMPER	4
			74	1	6907164-4	CRIMPER, INSULATION ■	3
2	21899-2	WASHER, FLAT (#10)	73				2
2	690603-1	SPRING, ASSIST	72	1	6907652	CRIMPER, WIRE ■	1

TERM APPL SPEC 114-2078

CRIMPING DATA

PAD LETTER	CRIMP HEIGHT	WIRE SIZE	WIRE STRIP LENGTH
A	.089	10	
B	.075	12	
C	NOT	USED	
D	NOT	USED	

CRIMP	SIZE	TYPE	FEED	PRESS (REF)
WIRE	.200	TAB	.770	565435-5
INSULATION	.200	O		

INSULATION RANGE	WIRE RANGE	APPLICATOR INSTRUCTION
110-210	12-10	AI 8037

REMARKS

THIS APPLICATOR WILL APPLY

60851-1
42563-6
42563-8
42563-9

LTR	REVISION RECORD	ECN	DR	CK	DATE
U	REVISED PER ECR-20-015067		GS	GB	21OCT2020
T	ECR-07-001513		HJ	JB	1-26-07
S	ECN 0150-0043-05		MYTE		1-05
R	0150-8511-95	—	MYTE		5-95
P	0150-2637-97	—	MYTE		7-97
N	ECN 0150-5217-94		MYTE		8-94
M	EC 0150 4895 93	—			10-93
L	ECN A-30991	—	MYTE		5-91
K	REV. PER ECN A-26199		JRCE		7-90
J	REACTIVATED REV.	—	JRCE		3/87
H	REV PER ECN R15898				3-84
G	REV PER ECN	R- 1143			8-29-81
G	REV. PER ECN	R- 1097			7-29-81
F	INACTIVE PER ECN	R- 1117			5-14-76
E	REDRAWN WITH CHANGES	R- 9614			4-11-73

LTR	REVISION RECORD	ECN	DR	CK	DATE

SET UP GAGE

LAYOUT NO.

DRAWN T. KLUNK 4/16/73

APPROVED

CHECKED

REV.

SCALE NONE

TE Connectivity

LOC A C NO. 687389-4 REV. U

NAME APPLICATOR, MINIATURE QUICK CHANGE HINGE BAR FEI (250 FLAG FASTON)

CODE CODE 00779 CUSTOMER AND ASSEMBLY DRAWING

RESTRICTED TO —

687389-4

THIS DRAWING IS A CONTROLLED DOCUMENT.

THIS DRAWING IS UNPUBLISHED. © COPYRIGHT 1973. BY AMP INCORPORATED. RELEASED FOR PUBLICATION May 19, 1978. ALL RIGHTS RESERVED. DIMENSIONS IN INCHES DO NOT SCALE PRINT

SHEET 8 PRINT 66

3067-1