PART NO.	ENGINEERING NO.	FINISHED LENGTH
1201080186	E10A00605M010	1.0M [3'3"]
1201080580	E10A00605M006	0.6M [2']

CABLE LENGTH TOLERANCES
>.3M [1FT]: +19mm-0 [+.75in-0]
.3 - .9M [1 - 3FT]: +44.5mm-0 [+1.75in-0]
.9 - 1.8M [3 - 6FT]: +55.6mm-0 [+2.19in-0]
1.8 - 3.7M [6 - 12FT: +88.9mm-0 [+3.50in-0]
3.7 - 7.3M [12 - 24FT]: +165.1mm-0 [+6.50in-0]
7.3-14.6M [24 - 48FT]: +317.5mm-0 [+12.50in-0]
14.6 - 30.5M [48-100FT]: +622.3mm-0 [+24.50in-0]
OVER 30M [100FT] +2% OF FINISHED LENGTH

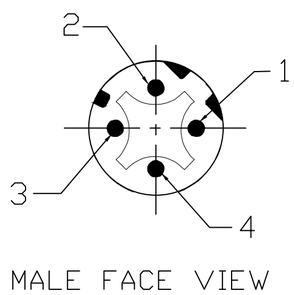

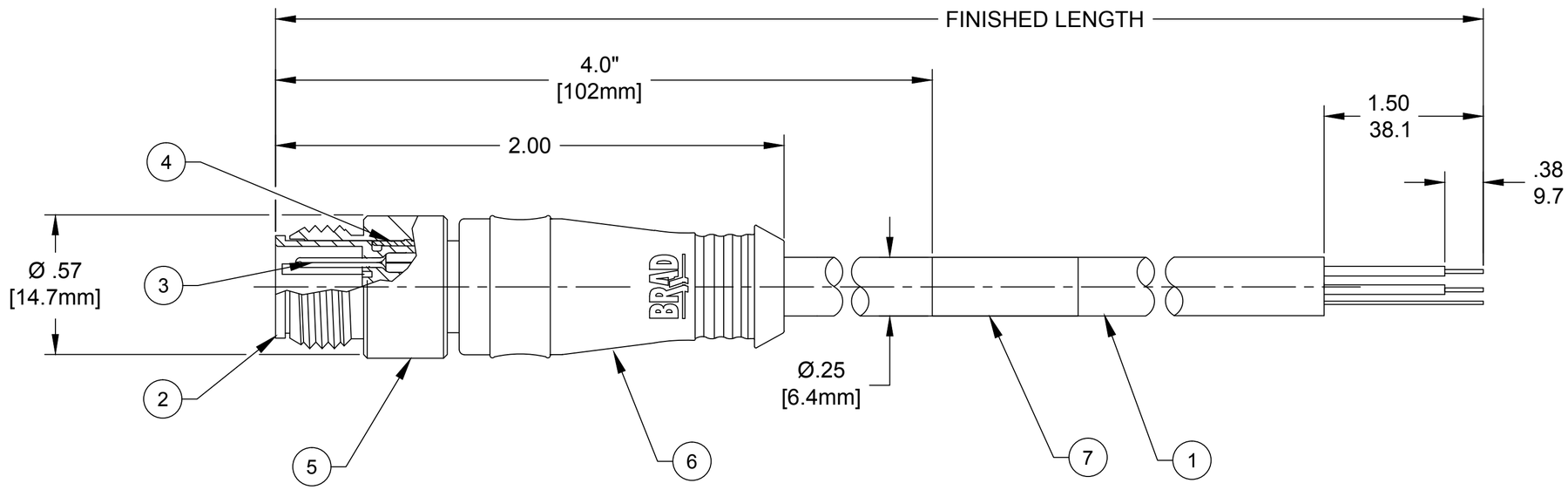

P1

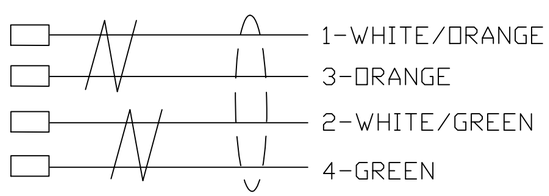

(D) WIRING DIAGRAM

PART NUMBER LEGEND

E10A00605M006

FINISHED LENGTH:
M006= 0.6 METER
M010= 1 METER
M100= 10 METER

NOTES:
1. MATERIAL: AS NOTED
2. FINISH: AS NOTED
3. ELECTRICAL:
   VOLTAGE: 125V
   CURRENT: 1.5A
4. TEMP RATING: -20° TO +75°C
5. PROTECTION: IP67 (WHEN MATED)
6. COUPLING THREAD: M12 X 1
7. UL CERTIFIED FILE: E200650
8. ALL DIMS ARE FOR REFERENCE UNLESS NOTED OTHERWISE

ITEM	DESCRIPTION	MATERIAL	FINISH
7	WRAP LABEL	VINYL	BLACK/YELLOW
6	OVERMOLD	PBT	GRAY
5	COUPLING NUT	BRASS	NICKEL PLATED
4	SHIELD HOUSING	BRASS	NICKEL PLATED
3	CONTACT PIN	COPPER ALLOY	GOLD PLATED
2	MALE INSERT, D-CODE	PUR	BLACK
1	CABLE, 2 PAIR, 26AWG, SHLD	TPE JACKET	TEAL

REV'D PER LATEST STD
EC NO: IPG2019-0154 10/4/18
DRWN: RSTONE
CH'KD: M ZIELIN 2018/10/10
APPR: BWOODMAN 2013/10/16
DESCRIPTION
REV D

QUALITY SYMBOL
▼=0
(C)=0

GENERAL TOLERANCES (UNLESS SPECIFIED)

	mm	INCH
4 PLACES	±---	±---
3 PLACES	±---	±---
2 PLACES	±---	±---
1 PLACE	±---	±---
ANGULAR ±---°		

DRAFT WHERE APPLICABLE MUST REMAIN WITHIN DIMENSIONS

DIMENSION STYLE: IN/MM
SCALE: NTS
DESIGN UNITS: INCH
THIRD ANGLE PROJECTION

DRAWN BY: GGUSTAFS DATE: 2013/09/26
CHECKED BY: BARDEN DATE: 2013/11/21
APPROVED BY: BWOODMAN DATE: 2013/10/16

TITLE: M12 D-CODED CABLE ASSY
4P MALE ST
#26/4 TEAL TPE

molex MOLEX INCORPORATED

MATERIAL NO.: SEE P/N CHART
DOCUMENT NO.: SD-120108-066
SHEET NO.: 1 0F 1
SIZE: C

THIS DRAWING CONTAINS INFORMATION THAT IS PROPRIETARY TO MOLEX INCORPORATED AND SHOULD NOT BE USED WITHOUT WRITTEN PERMISSION