3D MODEL: 1000147200 PSM ASY

BASE CAGE DETAILS

SHOWN

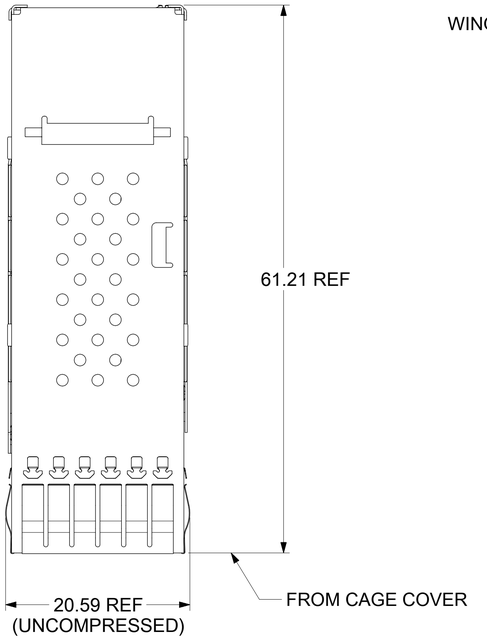

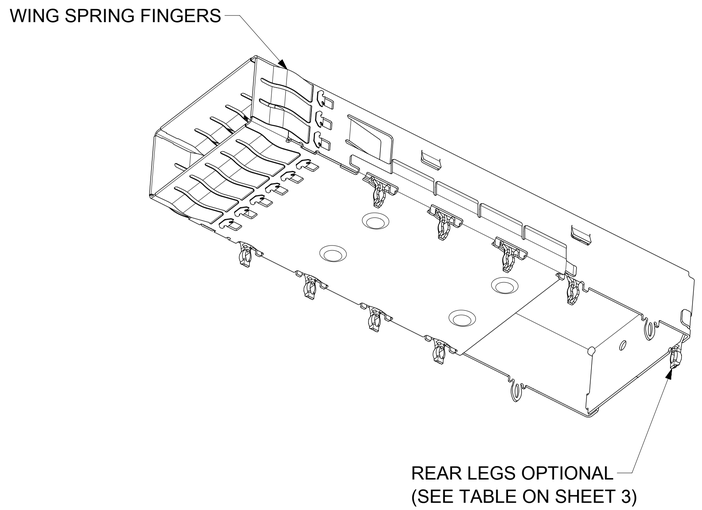

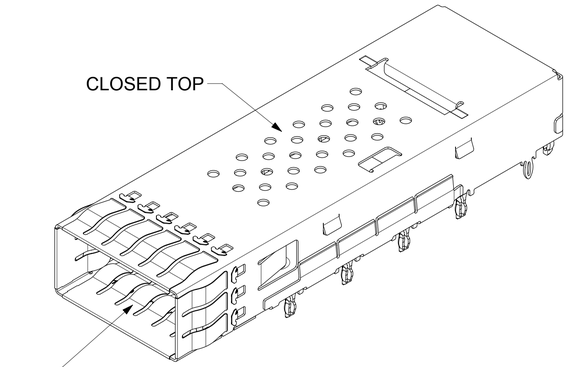

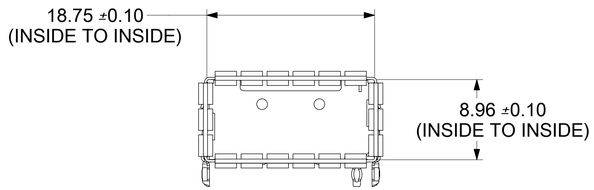

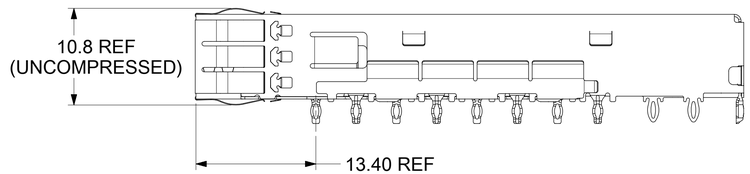

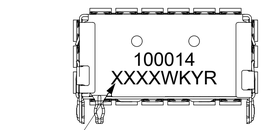

NOTES:
1. MATERIAL: CAGE: STAINLESS STEEL
   WING SPRING FINGERS: STAINLESS STEEL
   HEAT SINKS: NICKEL PLATED ALUMINUM
   HEAT SINK CLIP: STAINLESS STEEL
   LIGHT PIPES: POLYCARBONATE (UL 94-V-0)
2. DRAWING APPLIES TO ALL P/N'S SHOWN ON PAGE 3
3. DURING FINAL INSPECTION, CAGE LEG LOCATIONS AND STRAIGHTNESS MUST BE CHECKED USING APPROPRIATE GO - NO GO GAGE
4. DURING FINAL INSPECTION, CAGE MUST BE INSPECTED TO MAKE SURE LEG CONFIGURATIONS AND PART NUMBERS ARE CORRECT, USE SHEETS 3, 4 AND 5
5. PARTS TO BE INSPECTED PER MOLEX COSMETIC SPEC WI-HP-7-2774 (CLASS B UNLESS OTHERWISE SPECIFIED)
6. PRESS-FIT LEGS 2.44MM LONG -
   1.57 MINIMUM PCB THICKNESS FOR SINGLE SIDED USE.
   2.70 MINIMUM PCB THICKNESS FOR BELLY TO BELLY USE.
7. NO RoHS EXEMPTIONS

WEEK/YEAR DATE CODE TABLE	
WK	WEEK OF THE YEAR 01 THRU 52 (EXAMPLE: 01= FIRST WEEK OF YEAR 52= LAST WEEK OF YEAR
YR	18, 19, 20 ETC.. (EXAMPLE: YEAR 2018= 18)

DOCUMENT STATUS	P1	RELEASE DATE	2018/08/31 02:17:47

SYMBOLS: EA = 0; EC = 0; EB = 0; S = 0; ▼ = 0; C = 0; ☒ = 0; ■ = 0; V = 0

THIS DRAWING CONTAINS INFORMATION THAT IS PROPRIETARY TO MOLEX ELECTRONIC TECHNOLOGIES, LLC AND SHOULD NOT BE USED WITHOUT WRITTEN PERMISSION

DIMENSION UNITS	SCALE
mm	3:1

GENERAL TOLERANCES (UNLESS SPECIFIED)

ANGULAR TOL	±	2.0 °
4 PLACES	±	
3 PLACES	±	
2 PLACES	±	0.13
1 PLACE	±	0.25
0 PLACES	±	

DRAFT WHERE APPLICABLE MUST REMAIN WITHIN DIMENSIONS

CURRENT REV DESC: SEE REVISION TABLE

EC NO: 603674

DRWN:	MKEMPEGOWDA	2018/08/27
CHK'D:	TKUMARKC	2018/08/30
APPR:	RCHEN08	2018/08/31

INITIAL REVISION:

DRWN:	MKEMPEGOWDA	2016/06/22
APPR:	RCHEN08	2016/09/26

THIRD ANGLE PROJECTION

DRAWING	SERIES
D-SIZE	100014

molex

ZQSFP+ 1X1 CAGE ASSEMBLY
WING SPRING FINGER TYPE, HEAT SINK & LIGHT PIPE OPTIONS

PRODUCT CUSTOMER DRAWING

DOCUMENT NUMBER	DOC TYPE	DOC PART	REVISION
1000147200	PSD	ASY	D

MATERIAL NUMBER	CUSTOMER	SHEET NUMBER
SEE DRAWING	GENERAL MARKET	1 OF 7

CAGE ASSEMBLY OPTIONS

1000147446

SHOWN

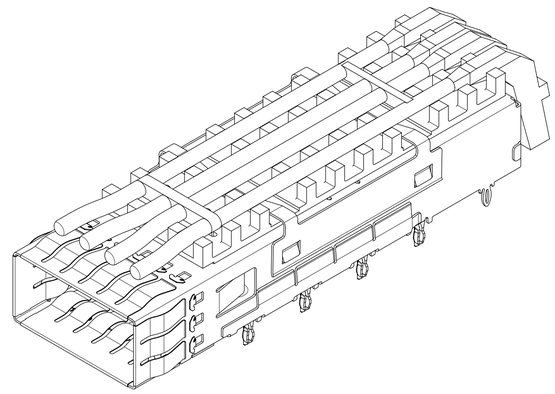

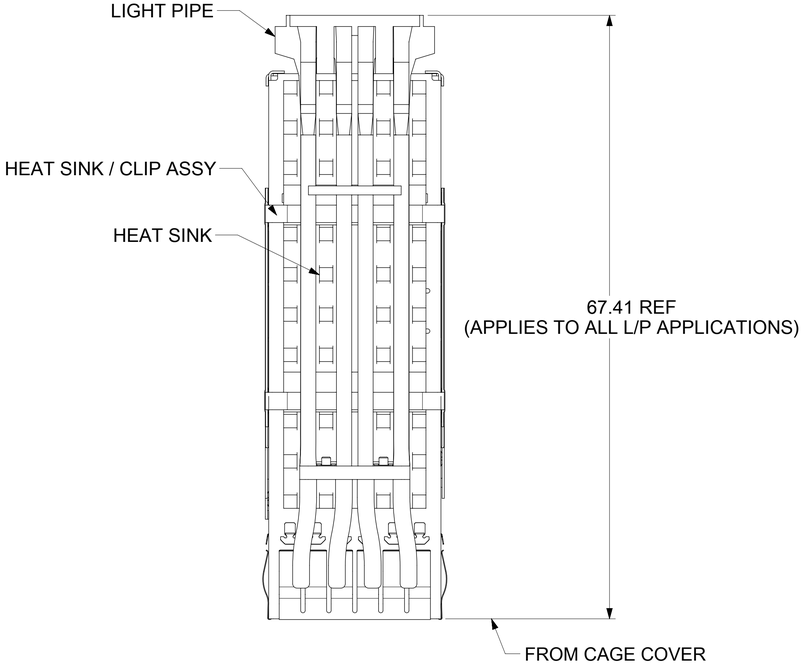

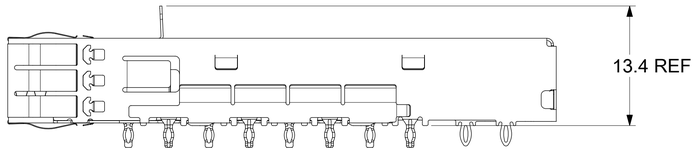

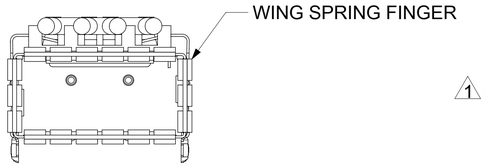

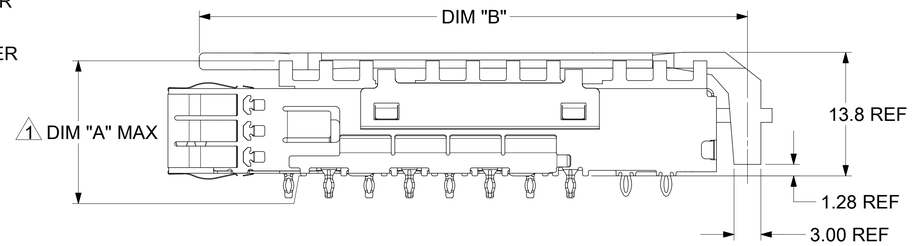

HEAT SINK HEIGHT OPTIONS

OVERALL HEAT SINK HEIGHT	DIM "A"
PCI	13.7
SAN	16.0
NET	23.0

1 HEIGHT OF HEAT SINK WITH MODULE INSERTED.
DIMENSION MAY BE LESS DUE TO MODULE AND HEAT SINK VARIATIONS

REAR LEG OPTIONS

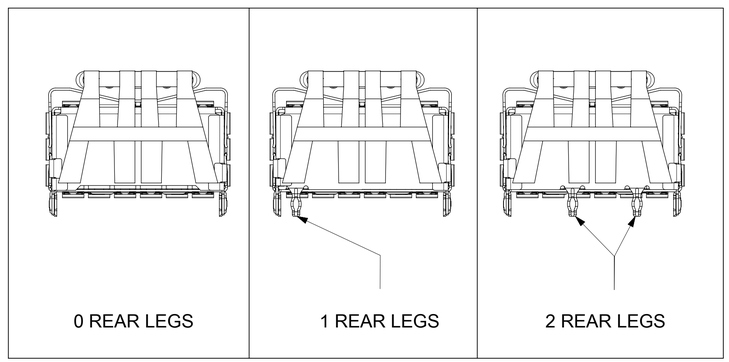

HEAT SINK AND LIGHT PIPE COMBINATIONS

HEAT SINK USED WITHOUT LIGHTPIPE

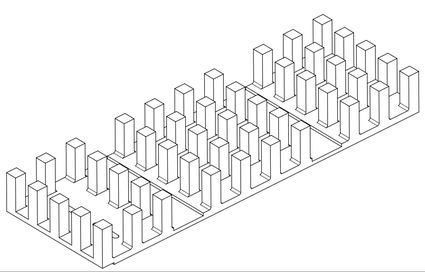

SINGLE / DUAL LIGHT PIPE

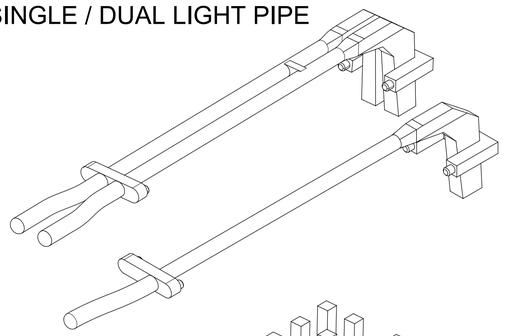

HEATSINK

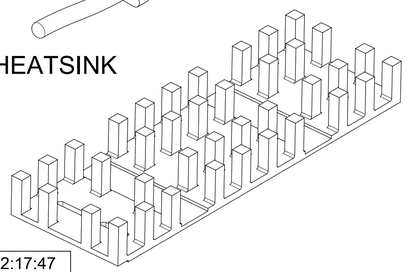

QUAD LIGHT PIPE

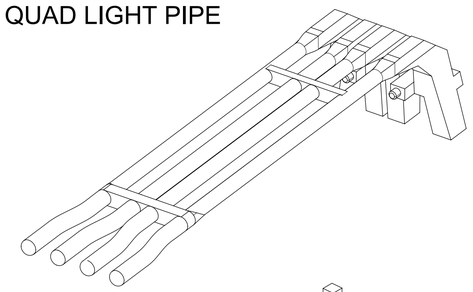

HEATSINK

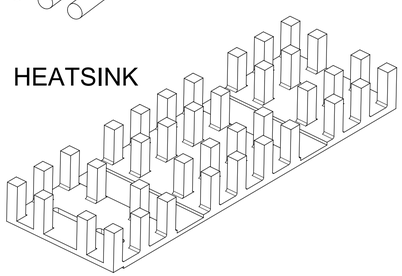

DOCUMENT STATUS	P1	RELEASE DATE	2018/08/31	02:17:47

SYMBOLS	THIS DRAWING CONTAINS INFORMATION THAT IS PROPRIETARY TO MOLEX ELECTRONIC TECHNOLOGIES, LLC AND SHOULD NOT BE USED WITHOUT WRITTEN PERMISSION		
A = 0	DIMENSION UNITS: mm	SCALE: 3:1	CURRENT REV DESC: SEE REVISION TABLE
B = 0	GENERAL TOLERANCES (UNLESS SPECIFIED)		
C = 0	ANGULAR TOL ± 2.0 °		EC NO: 603674
D = 0	4 PLACES ±		DRWN: MKEMPEGOWDA 2018/08/27
E = 0	3 PLACES ±		CHK'D: TKUMARKC 2018/08/30
F = 0	2 PLACES ± 0.13		APPR: RCHEN08 2018/08/31
G = 0	1 PLACE ± 0.25		INITIAL REVISION:
H = 0	0 PLACES ±		DRWN: MKEMPEGOWDA 2016/06/22
J = 0	DRAFT WHERE APPLICABLE MUST REMAIN WITHIN DIMENSIONS		APPR: RCHEN08 2016/09/26

THIRD ANGLE PROJECTION | DRAWING: D-SIZE | SERIES: 100014

molex

ZQSFP+ 1X1 CAGE ASSEMBLY
WING SPRING FINGER TYPE, HEAT SINK & LIGHT PIPE OPTIONS

PRODUCT CUSTOMER DRAWING

DOCUMENT NUMBER	DOC TYPE	DOC PART	REVISION
1000147200	PSD	ASY	D

MATERIAL NUMBER	CUSTOMER	SHEET NUMBER
SEE DRAWING	GENERAL MARKET	2 OF 7

PART NUMBER SELECTION

NO HEAT SINK
WITH LIGHT PIPE
CLOSED TOP

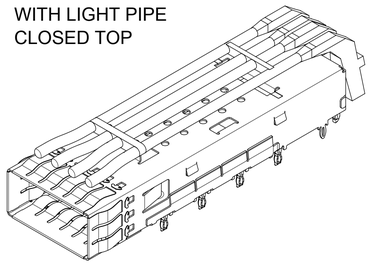

MOLEX P/N	LIGHT PIPE	#OF REAR LEGS PER PORT	DIM "B'
1000147231	SINGLE	0	61.25 REF
1000147232	SINGLE	1	61.25 REF
1000147233	DUAL	0	61.25 REF
1000147234	DUAL	1	61.25 REF
1000147235	QUAD	0	61.25 REF
1000147236	QUAD	1	61.25 REF

NO HEAT SINK
NO LIGHT PIPE
CLOSED TOP

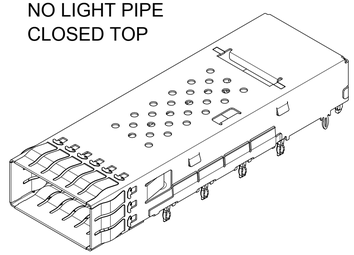

MOLEX P/N	#OF REAR LEGS PER PORT
1000147240	0
1000147242	1

NO HEAT SINKS
NO LIGHT PIPES
OPEN TOP

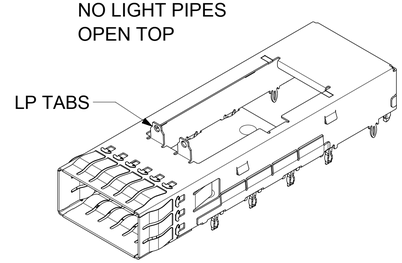

MOLEX P/N	#OF REAR LEGS PER PORT	LP TAB FEATURE
1000147250	0	YES
1000147252	1	YES
1000147253	2	YES
1000147256	2	NO

WITH HEAT SINK
NO LIGHT PIPE

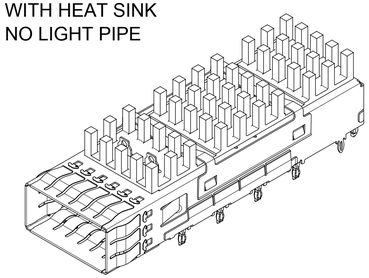

MOLEX P/N	HEAT SINK	#OF REAR LEGS PER PORT
1000147340	PCI	0
1000147341	SAN	0
1000147342	NET	0
1000147343	PCI	1
1000147344	SAN	1
1000147345	NET	1
1000147346	PCI	2
1000147347	SAN	2
1000147348	NET	2
1000147903	CUSTOM DIM A=20	2

WITH HEAT SINKS ANS LIGHT PIPES

MOLEX P/N	LIGHT PIPE	HEAT SINK	#OF REAR LEGS PER PORT	DIM "B"
1000147440	SINGLE	PCI	0	61.25 REF
1000147441	SINGLE	SAN	0	61.25 REF
1000147442	SINGLE	NET	0	61.25 REF
1000147443	DUAL	PCI	0	61.25 REF
1000147444	DUAL	SAN	0	61.25 REF
1000147445	DUAL	NET	0	61.25 REF
1000147446	QUAD	PCI	0	61.25 REF
1000147447	QUAD	SAN	0	61.25 REF
1000147448	QUAD	NET	0	61.25 REF
1000147540	SINGLE	PCI	1	61.25 REF
1000147541	SINGLE	SAN	1	61.25 REF
1000147542	SINGLE	NET	1	61.25 REF
1000147543	DUAL	PCI	1	61.25 REF
1000147544	DUAL	SAN	1	61.25 REF
1000147545	DUAL	NET	1	61.25 REF
1000147546	QUAD	PCI	1	61.25 REF
1000147547	QUAD	SAN	1	61.25 REF
1000147548	QUAD	NET	1	61.25 REF
1000147640	SINGLE	PCI	2	61.25 REF
1000147641	SINGLE	SAN	2	61.25 REF
1000147642	SINGLE	NET	2	61.25 REF
1000147643	DUAL	PCI	2	61.25 REF
1000147644	DUAL	SAN	2	61.25 REF
1000147645	DUAL	NET	2	61.25 REF
1000147646	QUAD	PCI	2	61.25 REF
1000147647	QUAD	SAN	2	61.25 REF
1000147648	QUAD	NET	2	61.25 REF
1000147744	DUAL	SAN	2	59.65 REF

SINGLE LIGHT PIPE

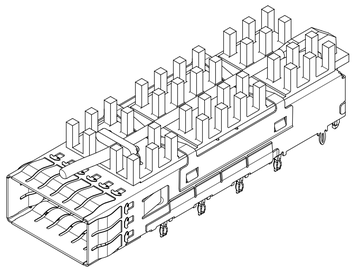

DUAL LIGHT PIPE

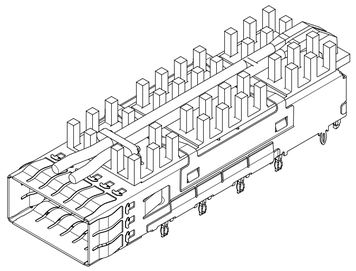

QUAD LIGHT PIPE

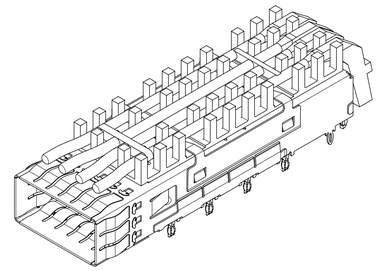

DOCUMENT STATUS	P1	RELEASE DATE	2018/08/31 02:17:47

SYMBOLS	
E =	0
E =	0
E =	0
S =	0
=	0
C =	0
=	0
=	0
=	0

THIS DRAWING CONTAINS INFORMATION THAT IS PROPRIETARY TO MOLEX ELECTRONIC TECHNOLOGIES, LLC AND SHOULD NOT BE USED WITHOUT WRITTEN PERMISSION

DIMENSION UNITS	SCALE
mm	2:1

GENERAL TOLERANCES (UNLESS SPECIFIED)

ANGULAR TOL	±	2.0 °
4 PLACES	±	
3 PLACES	±	
2 PLACES	±	0.13
1 PLACE	±	0.25
0 PLACES	±	

DRAFT WHERE APPLICABLE MUST REMAIN WITHIN DIMENSIONS

CURRENT REV DESC: SEE REVISION TABLE

EC NO: 603674
DRWN: MKEMPEGOWDA 2018/08/27
CHK'D: TKUMARKC 2018/08/30
APPR: RCHEN08 2018/08/31

INITIAL REVISION:
DRWN: MKEMPEGOWDA 2016/06/22
APPR: RCHEN08 2016/09/26

THIRD ANGLE PROJECTION | DRAWING: D-SIZE | SERIES: 100014

molex

ZQSFP+ 1X1 CAGE ASSEMBLY
WING SPRING FINGER TYPE, HEAT SINK & LIGHT PIPE OPTIONS

PRODUCT CUSTOMER DRAWING

DOCUMENT NUMBER	DOC TYPE	DOC PART	REVISION
1000147200	PSD	ASY	D

MATERIAL NUMBER	CUSTOMER	SHEET NUMBER
SEE DRAWING	GENERAL MARKET	3 OF 7

PCB LAYOUT FOR SINGLE SIDED MOUNTING

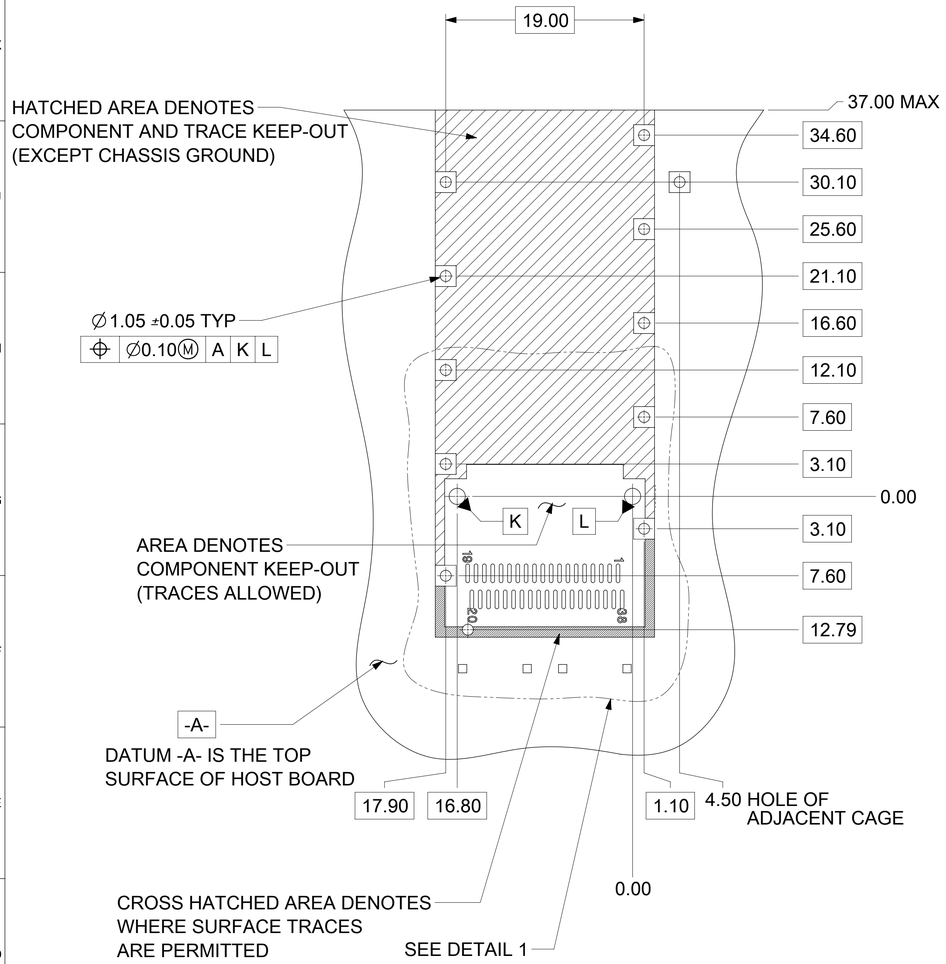

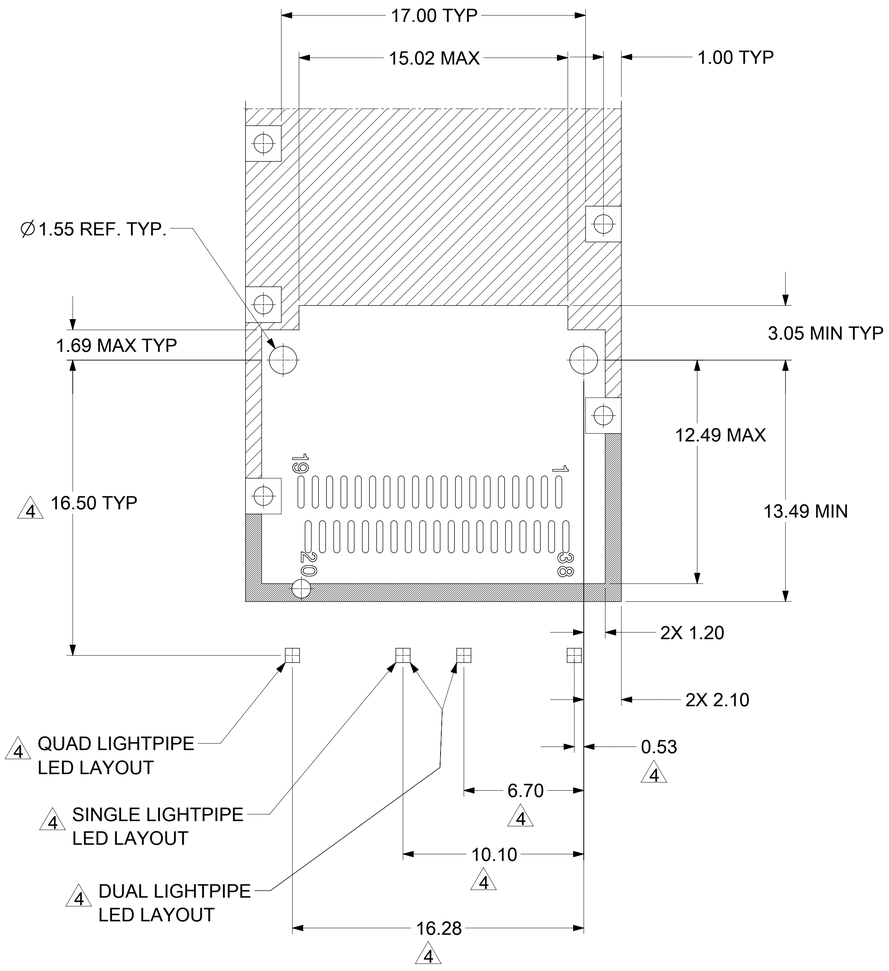

DETAIL 1
SCALE 6:1

NO REAR LEGS

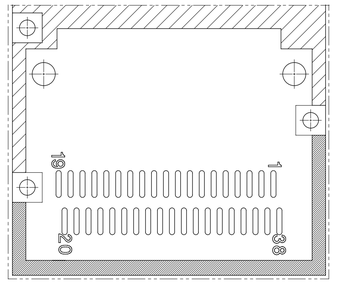

PARTIAL 1
SCALE 5:1

1 REAR LEG

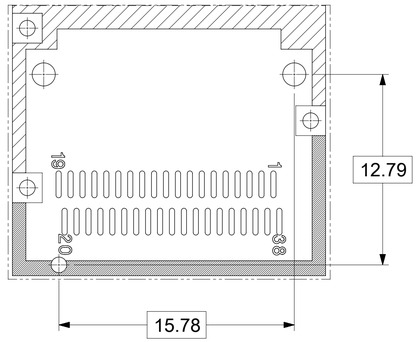

PARTIAL 2
SCALE 5:1

2 REAR LEGS

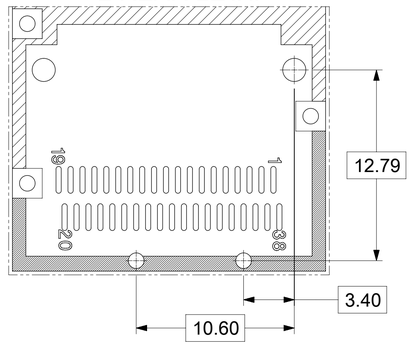

PARTIAL 3
SCALE5:1

NOTES:
1. PADS AND VIAS GO TO CHASSIS GROUND. (RECOMMENDED PADS TO BE 2.00mm SQUARE.)
2. RECOMMENDED THRU HOLE PLATING INCLUDES HASL, OSP, OR IMMERSION (GOLD, SILVER, OR TIN).
3. CONNECTOR PAD LAYOUT PER SFF-8663 WILL ACCOMODATE MOLEX CONNECTOR SERIES 170432.
4. NOTED DIMENSIONS ONLY APPLY TO CAGE ASSEMBLIES WITH LIGHT PIPES.

DOCUMENT STATUS	P1	RELEASE DATE	2018/08/31 02:17:47

SYMBOLS	
A =	0
E =	0
B =	0
S =	0
=	0
C =	0
=	0
=	0
V =	0

THIS DRAWING CONTAINS INFORMATION THAT IS PROPRIETARY TO MOLEX ELECTRONIC TECHNOLOGIES, LLC AND SHOULD NOT BE USED WITHOUT WRITTEN PERMISSION

DIMENSION UNITS	SCALE
mm	3.5:1

GENERAL TOLERANCES (UNLESS SPECIFIED)		
ANGULAR TOL	±	2.0 °
4 PLACES	±	
3 PLACES	±	
2 PLACES	±	0.13
1 PLACE	±	0.25
0 PLACES	±	

DRAFT WHERE APPLICABLE MUST REMAIN WITHIN DIMENSIONS

CURRENT REV DESC: SEE REVISION TABLE

EC NO:	603674	
DRWN:	MKEMPEGOWDA	2018/08/27
CHK'D:	TKUMARKC	2018/08/30
APPR:	RCHEN08	2018/08/31
INITIAL REVISION:		
DRWN:	MKEMPEGOWDA	2016/06/22
APPR:	RCHEN08	2016/09/26

THIRD ANGLE PROJECTION

DRAWING	SERIES
D-SIZE	100014

molex

ZQSFP+ 1X1 CAGE ASSEMBLY
WING SPRING FINGER TYPE, HEAT SINK & LIGHT PIPE OPTIONS

PRODUCT CUSTOMER DRAWING

DOCUMENT NUMBER	DOC TYPE	DOC PART	REVISION
1000147200	PSD	ASY	D

MATERIAL NUMBER	CUSTOMER	SHEET NUMBER
SEE DRAWING	GENERAL MARKET	4 OF 7

PCB LAYOUT FOR BELLY TO BELLY MOUNTING

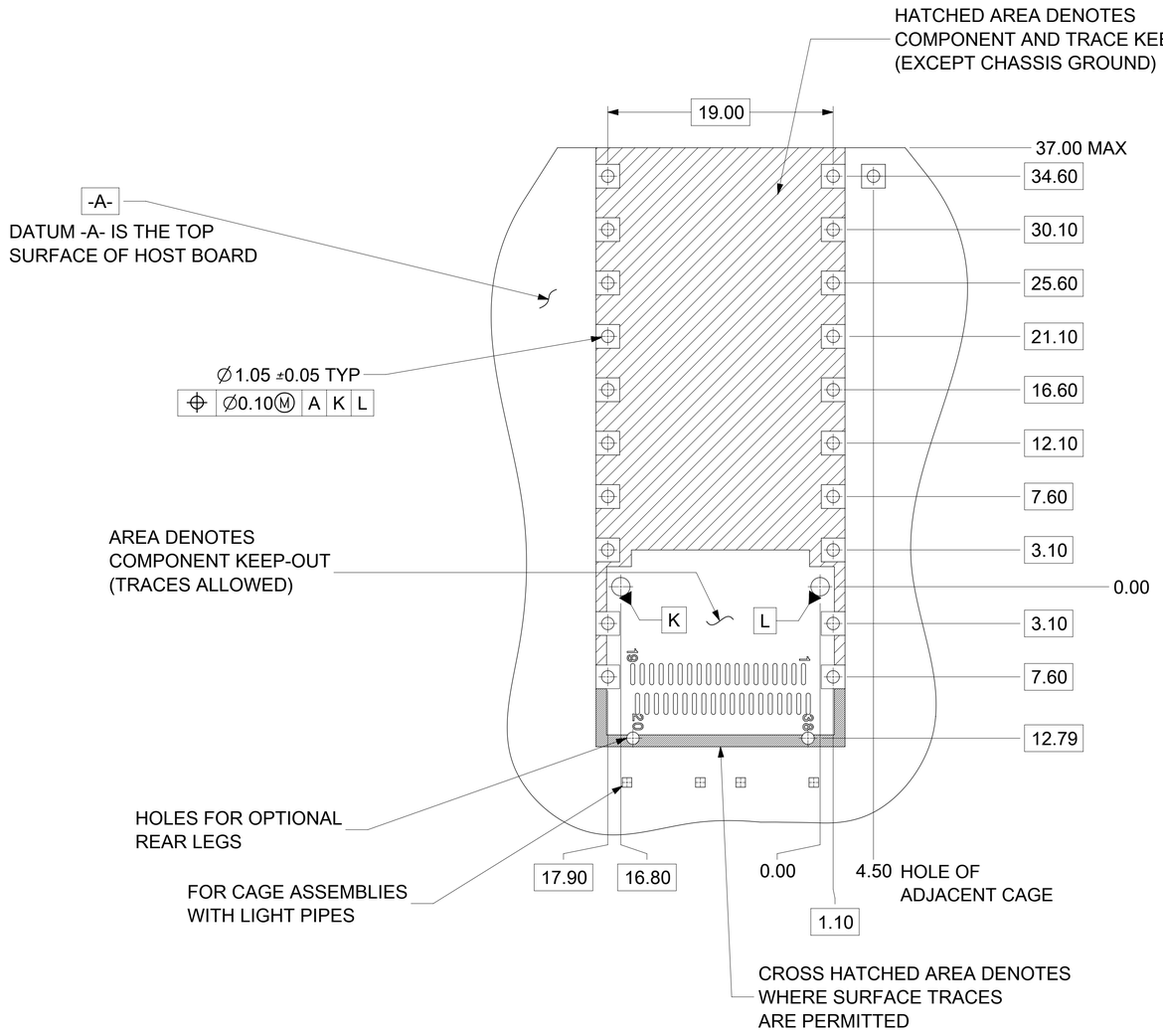

NOTE:
SEE SHEET 4 FOR
HOST CONNECTOR DETAIL
AND LED LOCATION DETAILS

NO REAR LEGS

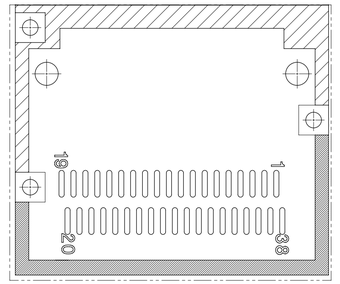

PARTIAL 1
SCALE 5:1

1 REAR LEG

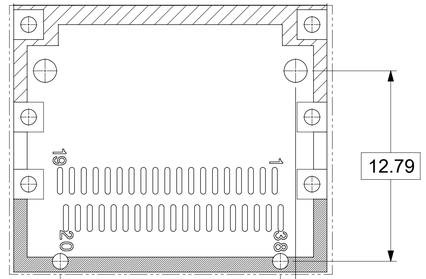

PARTIAL 5
SCALE 5:1

2 REAR LEGS

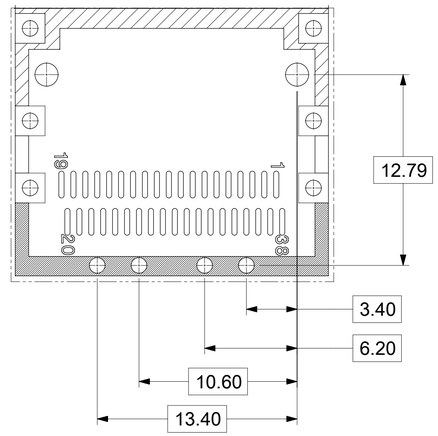

PARTIAL 6
SCALE 5:1

NOTES:
1. PADS AND VIAS GO TO CHASSIS GROUND. (RECOMMENDED PADS TO BE 2.00mm SQUARE.)
2. RECOMMENDED THRU HOLE PLATING INCLUDES HASL, OSP, OR IMMERSION (GOLD, SILVER, OR TIN).
3. CONNECTOR PAD LAYOUT PER SFF-8663 WILL ACCOMODATE MOLEX CONNECTOR SERRIES 170432.

DOCUMENT STATUS	P1	RELEASE DATE	2018/08/31	02:17:47

SYMBOLS	
V =	0
E =	0
B =	0
S =	0
=	0
C =	0
=	0
=	0
=	0

THIS DRAWING CONTAINS INFORMATION THAT IS PROPRIETARY TO MOLEX ELECTRONIC TECHNOLOGIES, LLC AND SHOULD NOT BE USED WITHOUT WRITTEN PERMISSION

DIMENSION UNITS	SCALE
mm	4:1

GENERAL TOLERANCES (UNLESS SPECIFIED)

ANGULAR TOL	±	2.0 °
4 PLACES	±	
3 PLACES	±	
2 PLACES	±	0.13
1 PLACE	±	0.25
0 PLACES	±	

DRAFT WHERE APPLICABLE MUST REMAIN WITHIN DIMENSIONS

CURRENT REV DESC: SEE REVISION TABLE

EC NO: 603674
DRWN: MKEMPEGOWDA 2018/08/27
CHK'D: TKUMARKC 2018/08/30
APPR: RCHEN08 2018/08/31

INITIAL REVISION:
DRWN: MKEMPEGOWDA 2016/06/22
APPR: RCHEN08 2016/09/26

molex

ZQSFP+ 1X1 CAGE ASSEMBLY
WING SPRING FINGER TYPE, HEAT SINK & LIGHT PIPE OPTIONS

PRODUCT CUSTOMER DRAWING

THIRD ANGLE PROJECTION	DRAWING	SERIES
	D-SIZE	100014

DOCUMENT NUMBER	DOC TYPE	DOC PART	REVISION
1000147200	PSD	ASY	D

MATERIAL NUMBER	CUSTOMER	SHEET NUMBER
SEE DRAWING	GENERAL MARKET	5 OF 7

BEZEL AND BOARD POSITION DIMENSIONS FOR BELLY TO BELLY MOUNTING

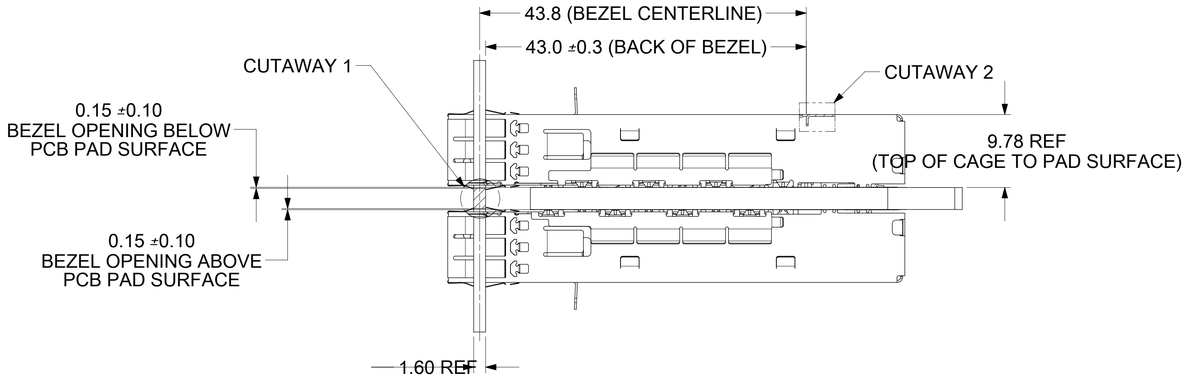

SINGLE LIGHT PIPE 2

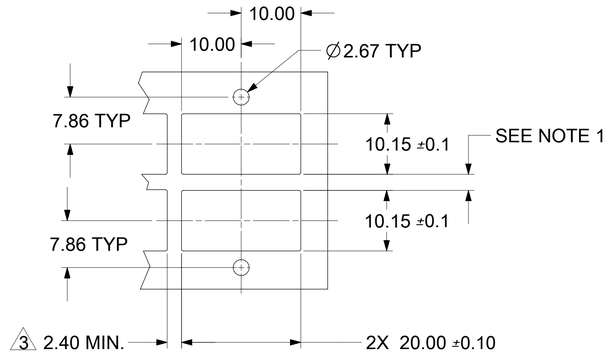

DUAL/QUAD LIGHT PIPE 2

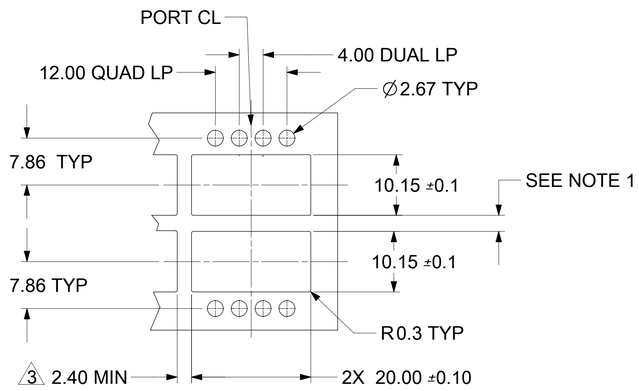

NOTE:
1. PCB THICKNESS VARIATION MUST BE CONSIDERED WHEN DETERMINING BEZEL OPENING LOCATION.
2. NOTED DIMENSIONS ONLY APPLY TO CAGE ASSEMBLIES WITH LIGHT PIPES.
3. THIS DIMENSION IS FOR REFERENCE ONLY. USER CAN MODIFY UT DEPENDS ON APPLICATION. (THIS DIMENSION VARIES BASED ON DISTANCE OF "HOLE OF ADJACENT CAGE" ON PCB LAYOUT.)

BEZEL AND BOARD POSITION DIMENSIONS FOR SINGLE SIDE MOUNTING

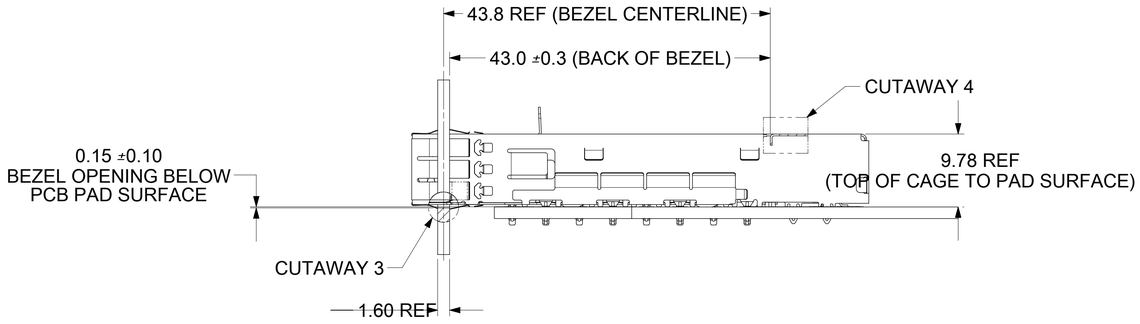

SINGLE LIGHT PIPE 2

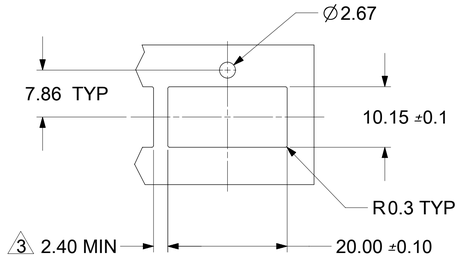

DUAL/QUAD LIGHT PIPE 2

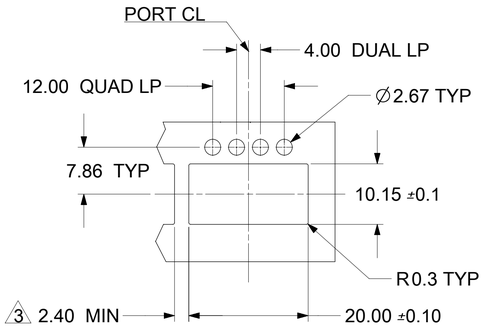

SYMBOLS			
= 0	DIMENSION UNITS: mm	SCALE: 2.5:1	
= 0	GENERAL TOLERANCES (UNLESS SPECIFIED)		
= 0	ANGULAR TOL	±	2.0°
= 0	4 PLACES	±	
= 0	3 PLACES	±	
= 0	2 PLACES	±	0.13
= 0	1 PLACE	±	0.25
= 0	0 PLACES	±	
= 0	DRAFT WHERE APPLICABLE MUST REMAIN WITHIN DIMENSIONS		

THIS DRAWING CONTAINS INFORMATION THAT IS PROPRIETARY TO MOLEX ELECTRONIC TECHNOLOGIES, LLC AND SHOULD NOT BE USED WITHOUT WRITTEN PERMISSION

CURRENT REV DESC: SEE REVISION TABLE

EC NO: 603674
DRWN: MKEMPEGOWDA 2018/08/27
CHK'D: TKUMARKC 2018/08/30
APPR: RCHEN08 2018/08/31

INITIAL REVISION:
DRWN: MKEMPEGOWDA 2016/06/22
APPR: RCHEN08 2016/09/26

THIRD ANGLE PROJECTION | DRAWING: D-SIZE | SERIES: 100014

molex

ZQSFP+ 1X1 CAGE ASSEMBLY
WING SPRING FINGER TYPE, HEAT SINK & LIGHT PIPE OPTIONS

PRODUCT CUSTOMER DRAWING

DOCUMENT NUMBER	DOC TYPE	DOC PART	REVISION
1000147200	PSD	ASY	D

MATERIAL NUMBER	CUSTOMER	SHEET NUMBER
SEE DRAWING	GENERAL MARKET	6 OF 7

DOCUMENT STATUS	P1	RELEASE DATE	2018/08/31 02:17:47

REV	DATE	DESCRIPTION
A	2016/09/06	INITIAL RELEASE
A1	2016/10/12	CHANGED DOCUMENT TYPE FROM RSD TO SD.
B	2016/10/13	SHEET 1: F16: CHANGED DIMENSION FROM 20.6 REF TO 20.59 REF. SHEET 3: F13: REMOVED PART NUMBER 1000141242 FROM TABLE.
C	2018/04/17	SHEET 2: E08: ADDED DIM 1.28 REF
D	2018/08/27	SHEET 3: H07: ADDED LP TAB FEATURE OPTION ON P/N TABLE H09: ADDED NEW P/N 1000147256 IN THE P/N TABLE K09: INDICATED THE LP TAB FEATURE LOCATION

SYMBOLS	
EA	= 0
EC	= 0
EP	= 0
S	= 0
	= 0
C	= 0
	= 0
	= 0
	= 0

THIS DRAWING CONTAINS INFORMATION THAT IS PROPRIETARY TO MOLEX ELECTRONIC TECHNOLOGIES, LLC AND SHOULD NOT BE USED WITHOUT WRITTEN PERMISSION

DIMENSION UNITS	SCALE
mm	1:1

GENERAL TOLERANCES (UNLESS SPECIFIED)

ANGULAR TOL	±	2.0 °
4 PLACES	±	
3 PLACES	±	
2 PLACES	±	0.13
1 PLACE	±	0.25
0 PLACES	±	

DRAFT WHERE APPLICABLE MUST REMAIN WITHIN DIMENSIONS

CURRENT REV DESC: SEE REVISION TABLE

EC NO: 603674

DRWN:	MKEMPEGOWDA	2018/08/27
CHK'D:	TKUMARKC	2018/08/30
APPR:	RCHEN08	2018/08/31

INITIAL REVISION:

DRWN:	MKEMPEGOWDA	2016/06/22
APPR:	RCHEN08	2016/09/26

THIRD ANGLE PROJECTION

DRAWING	SERIES
D-SIZE	100014

molex

ZQSFP+ 1X1 CAGE ASSEMBLY
WING SPRING FINGER TYPE, HEAT SINK & LIGHT PIPE OPTIONS

PRODUCT CUSTOMER DRAWING

DOCUMENT NUMBER	DOC TYPE	DOC PART	REVISION
1000147200	PSD	ASY	D

MATERIAL NUMBER	CUSTOMER	SHEET NUMBER
SEE DRAWING	GENERAL MARKET	7 OF 7

DOCUMENT STATUS	P1	RELEASE DATE	2018/08/31 02:17:47