THIS COPY IS PROVIDED ON A RESTRICTED BASIS AND IS NOT TO BE USED IN ANY WAY DETRIMENTAL TO THE INTERESTS OF PANDUIT CORP.

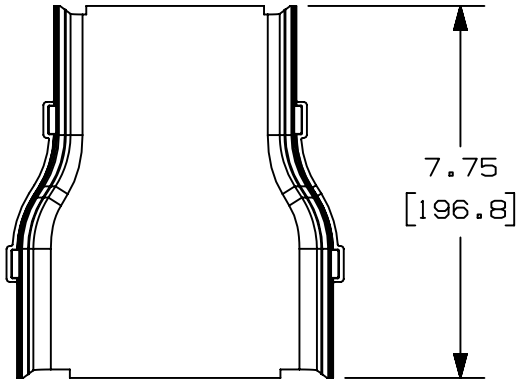

NOTES:

1. SEE CURRENT CATALOG FOR ADDITIONAL PART SUFFIXES TO INDICATE COLOR AND/OR PACKAGE QUANTITY.
2. THE FIBERRUNNER 6x4 TO FIBERRUNNER 4x4 REDUCER IS DESIGNED WITH A MINIMUM 2" (50.8) BEND RADIUS TO PROTECT FIBER OPTIC CABLES.
3. PARTS SUPPLIED:
   (1)- REDUCER
4. DIMENSIONS IN PARENTHESES ARE IN METRIC.

PANDUIT PART NUMBER	WEIGHT	MATERIAL
FRRF6FR4**	0.57 LB/EACH (259g/EACH)	ABS
FRRF6FR4L**	0.57 LB/EACH (259g/EACH)	PC/ABS

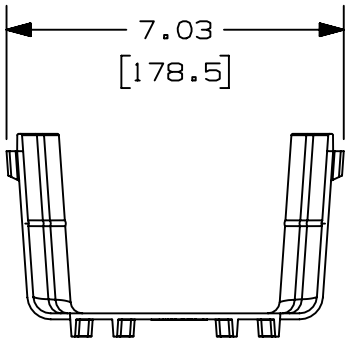

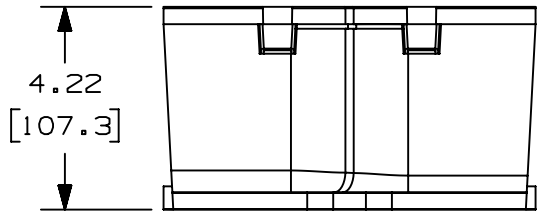

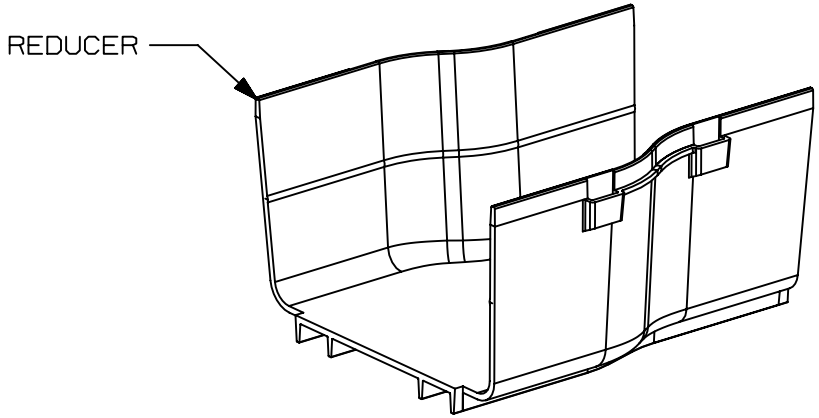

REV	DATE	BY	CHK	APR	DESCRIPTION	ECN
02A	8/27/20	MEX-JAGC	DWR	DWR	ADDED PART NUMBER UPDATED DRAWING BORDER & TITLE BLOCK	V09002DZ/11

TITLE

FIBERRUNER 6x4 TO FIBERRUNNER 4x4 REDUCER (FRRF6FR4, FRRF6FR4L**)**

CUSTOMER DRAWING

ITEM REVISION NAME: D37847BY/02

DATASET FILE NAME: D37847BY_DC_FRRF64/02A

PANDUIT

MATERIAL: SEE PART NUMBER TABLE ABOVE

THIRD ANGLE PROJECTION

DRAWING NUMBER: 37847-69

DRAWN BY	DATE	CHK	SCALE	SIZE
JHNU	7/18/01	HIW	NONE	A

SHT 1 OF 1

D10100DA/20