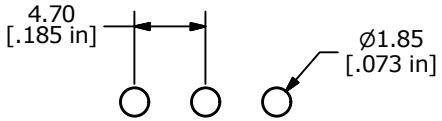

P.C. MOUNTING

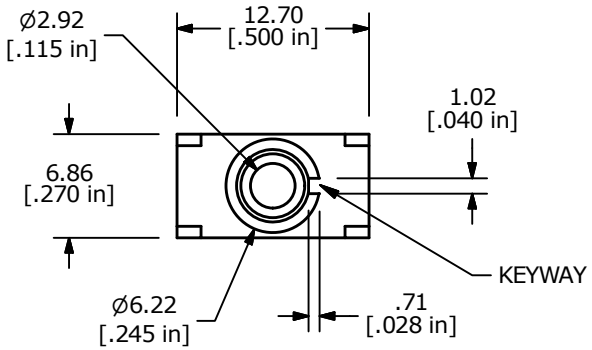

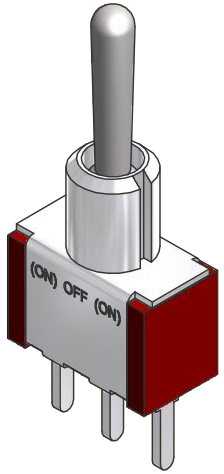

SWITCH FUNCTION		
POS. 1	POS. 2	POS. 3
(ON)	OFF	(ON)
2-3	OPEN	2-1

(ON) = MOMENTARY

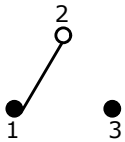

CIRCUIT: SPDT

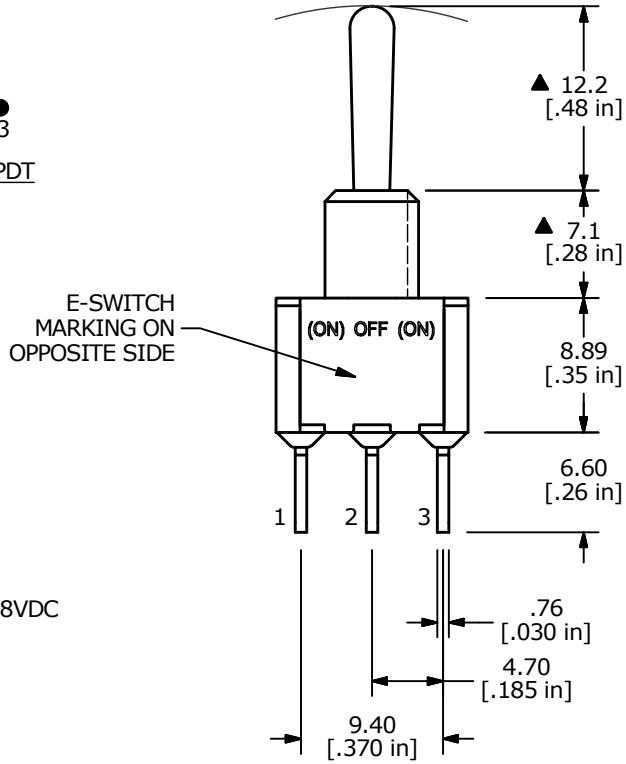

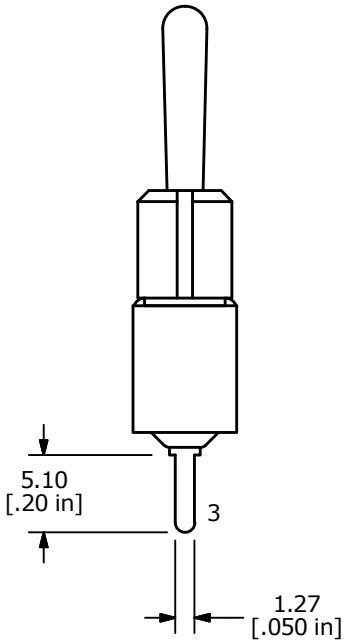

NOTE:
1. ALL DIMENSIONS IN MM [INCH]
2. GENERAL TOLERANCE: X.X = ±0.4
   X.XX = ±0.25
3. TERMINAL NUMBERS FOR REF ONLY
▲ 4. PLATING MATERIAL: SILVER
5. RATING: 5 AMPS W/RESITIVE LOAD @ 120VAC or 28VDC
   2 AMPS W/RESITIVE LOAD @ 250VAC
6. ELECTRIC LIFE: 40,000 make-and-break cycles
   at full load.
7. INSULATION RESISTANCE: 1,000 Mega-ohm min.
8. DIELECTRIC STRENGTH: 1,000 V RMS @sea level.
9. OPERATING TEMP.: -30°C to 85°C
10. ▲ DENOTES CRITICAL PARAMETER.
11. 2011/65/EU (ROHS) COMPLIANT

REV	PCR NO	DESCRIPTION	DATE	BY
B	23080	UPDATE DRAWING	11/6/17	MW
A	16102	RELEASED FOR PRODUCTION	6/8/06	CT

THE INFORMATION CONTAINED IN THIS DOCUMENT IS PROPRIETARY TO E-SWITCH AND IS NOT TO BE COPIED OR TRANSFERRED

E-SWITCH®

TITLE 100SP4T1B4M2QE

SCALE	DATE	DR	DWG	REV
2:1	6/8/2006	CT	T114004	B