8	7	6	5	4	3	2	1

THIS DRAWING IS UNPUBLISHED. RELEASED FOR PUBLICATION -,- .
© COPYRIGHT - By - ALL RIGHTS RESERVED.

REVISIONS

P	LTR	DESCRIPTION	DATE	DWN	APVD
	C	REVISED PER ECO-15-015252	13NOV15	BJ	FY

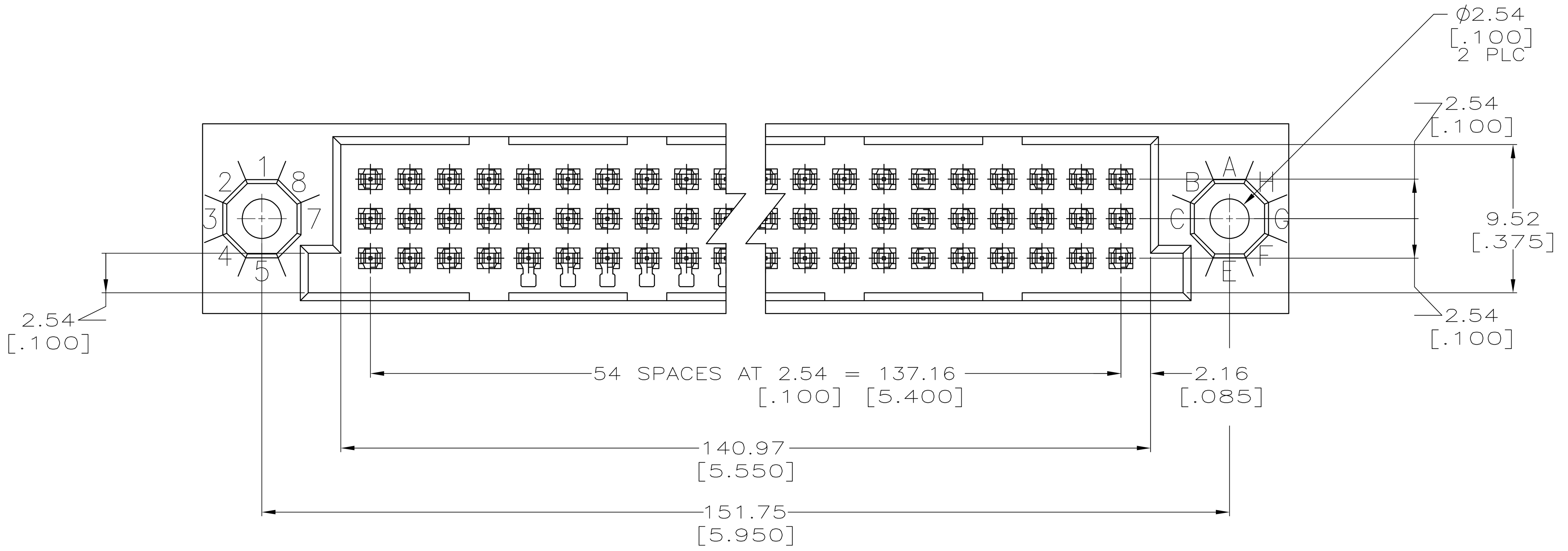

1. HOUSING MATERIAL: THERMOPLASTIC, BLACK.
2. CONTACT MATERIAL: PHOS. BRONZE.
3. FINISH:
   MATING AREA: MEETS THE PERFORMANCE REQUIREMENTS OF PRODUCT SPECIFICATION 108-9063; BASED ON TELCORDIA DR-1217-CORE APPLICATIONS IN UNCONTROLLED ENVIRONMENTS.
   SOLDER TAILS AREA: TIN-LEAD PLATED.
4. ACTION PIN POSTS REQUIRE 2.36[.093] MIN THICK P.C. BOARD. RECOMMENDED P.C. BOARD HOLES ARE 1.151 [.0453] DIA PLATED THRU WITH 0.025-0.076 [.001-.003] COPPER, WITH 0.0076 [.0003] MIN TIN-LEAD PLATING, FINISHED HOLE AFTER PLATING 0.94-1.09 [.037-.043] DIA.

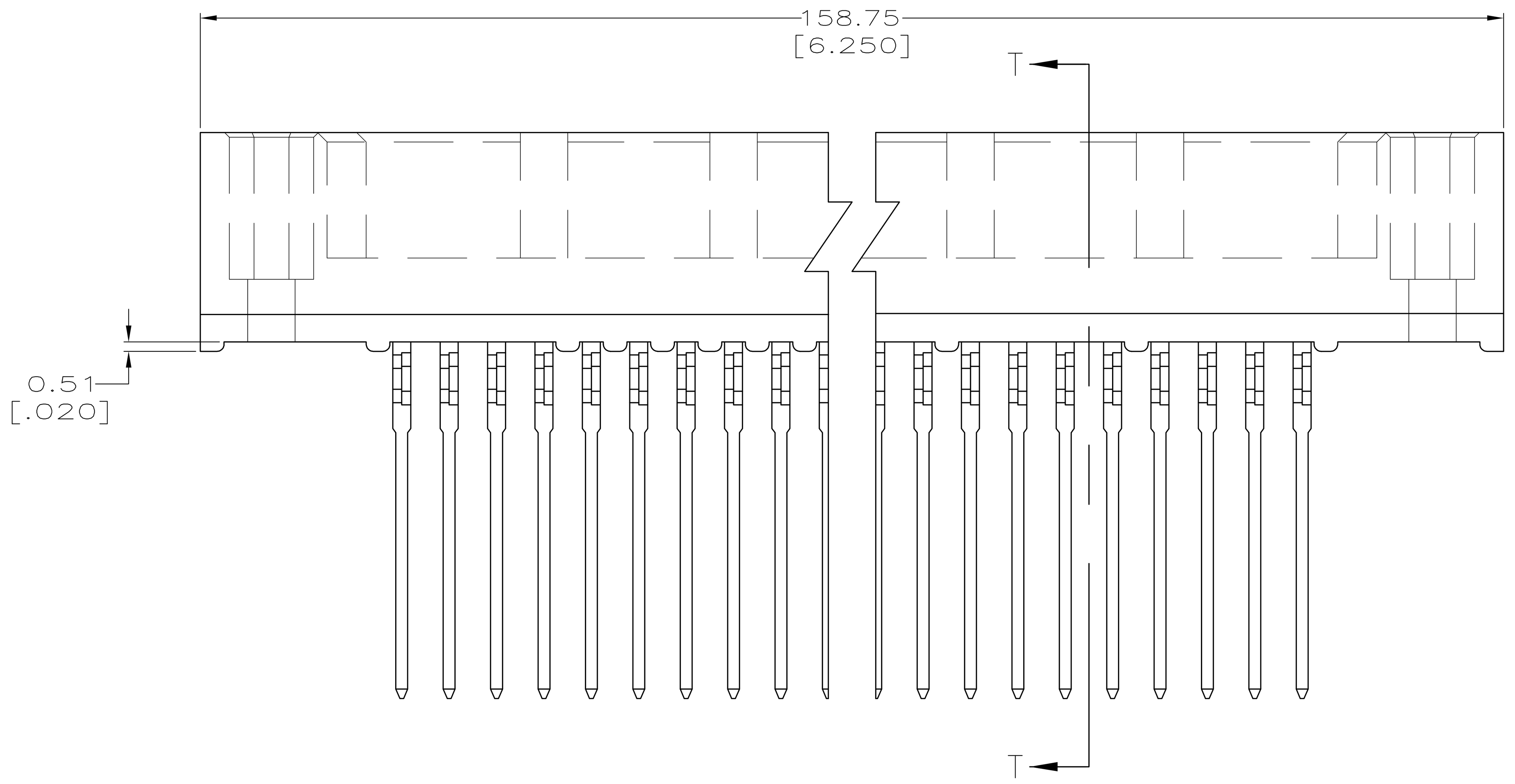

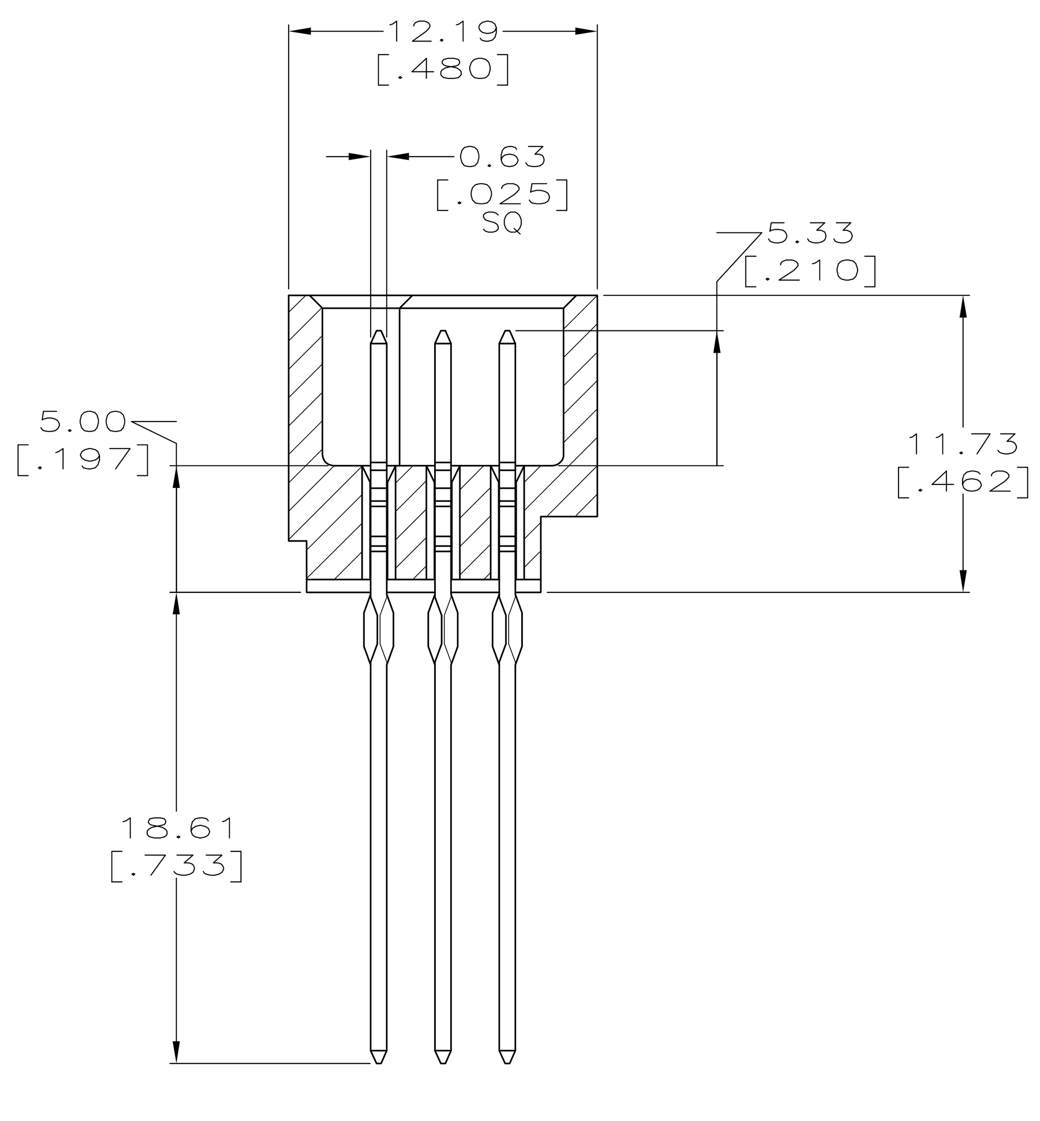

SECTION T-T

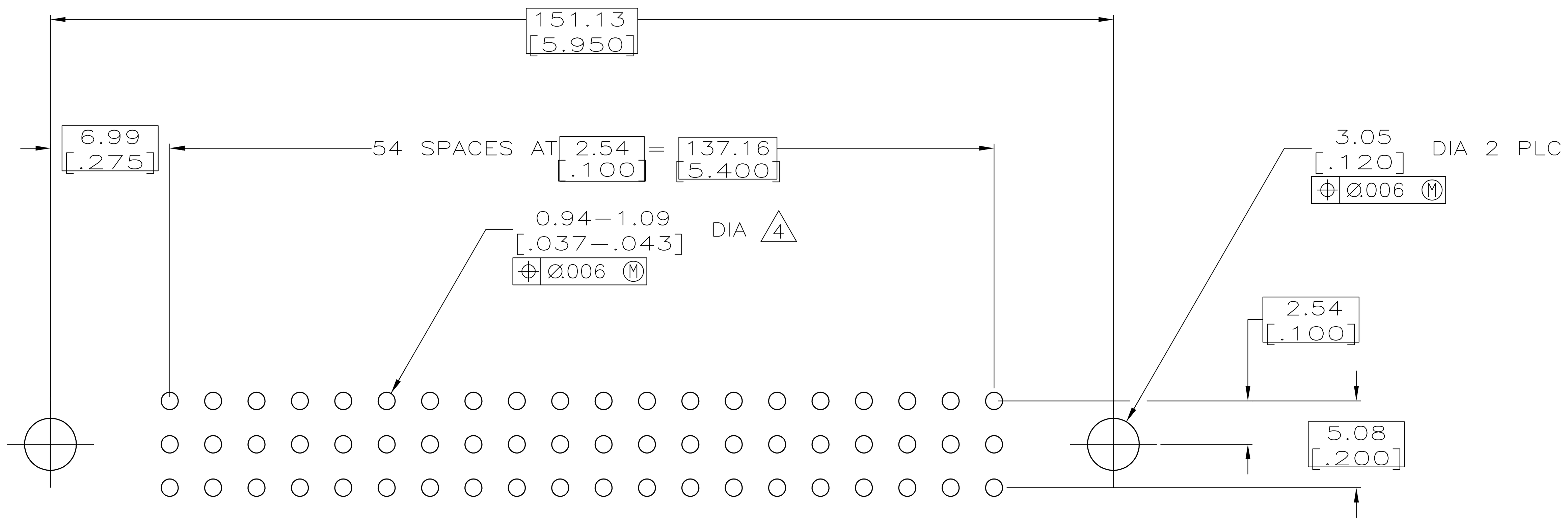

RECOMMENDED P.C. BOARD LAYOUT

NUMBER END	A	1		1		1		1		1		1		1		1		1		1		1	1	1	1	1	1	1	1	1	1	1	1	1	1	1	1	1	1	1	1	1	1	1	1	1	1	1	1	1	1	1	1	1	1	1	A	LETTER END
	B		1		1		1		1		1		1		1		1		1		1																													1	1	1	1	1	1	1	B	
	C	1		1		1		1		1		1		1		1		1		1		1	1	1	1	1	1	1	1	1	1	1	1	1	1	1	1	1	1	1	1	1	1	1	1	1	1	1	1	1	1	1	1	1	1	1	C	
	ROW	55					50					45					40					35					30					25					20					15					10					5				1	ROW	

COLUMN NUMBER - CONTACT LOCATION TABLE

107	532835-1
NO OF POSN	PART NUMBER

THIS DRAWING IS A CONTROLLED DOCUMENT.

DIMENSIONS: INCHES

TOLERANCES UNLESS OTHERWISE SPECIFIED:
0 PLC ± -
1 PLC ± -
2 PLC ± 0.13 [.005]
3 PLC ± -
4 PLC ± -
ANGLES ± -

MATERIAL 1 2
FINISH 3

DWN P.YEAGER 2-18-83
CHK P.F.Y. 3-1-83
APVD F.JUNKINS 3-2-83
PRODUCT SPEC -
APPLICATION SPEC -
WEIGHT -

TE Connectivity

NAME: HDI, PIN ASSEMBLY, 3 ROW SELECT LOADED

SIZE A1 | CAGE CODE 00779 | DRAWING NO C-532835 | RESTRICTED TO -

CUSTOMER DRAWING | SCALE 4:1 | SHEET 1 OF 1 | REV C

4805 (1/15)