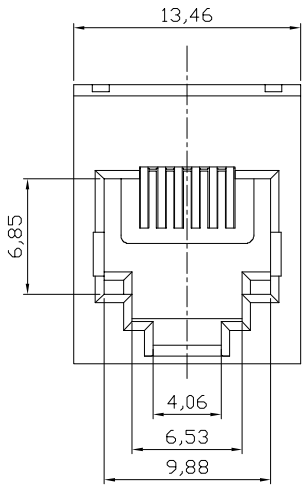

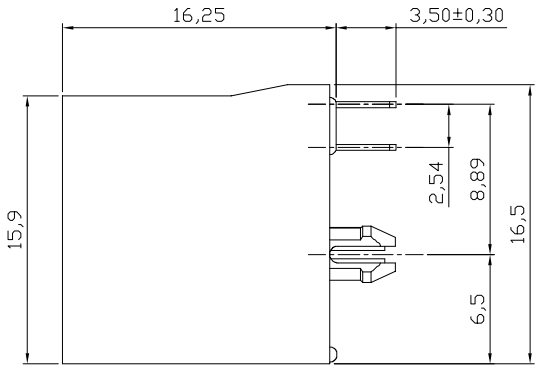

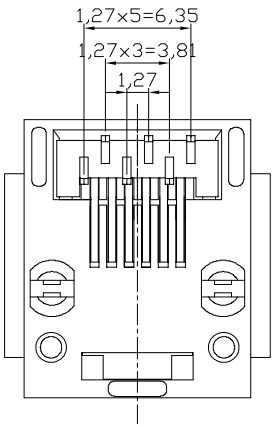

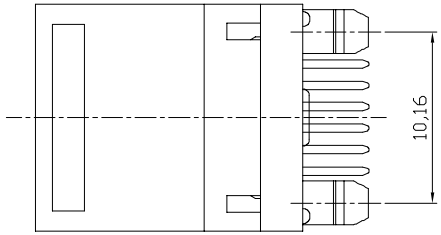

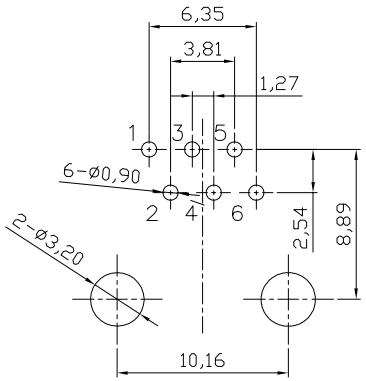

PC Board Layout
Component Side Shown

NOTES:
Mechanical:
1. Housing&Insert material : Glass Filled Polyester UL94V-0 , Color: Black
2. Contact material: Phosphor Bronze t=0.35mm
3. Contact plating: Contact area---See order code
100~200u" Tin on solder area
all over 30~50u" Nickel
4. Operating Life: 750 Cycles min.
5. PCB Retention Pre-solder: 1 LB min.
6. PCB Retention Post-solder: 10 LBS min.
Electrical:
1. Voltage Rating: 125VAC.
2. Current Rating: 1.5AMP.
3. Contact Resistance: 30mΩ max.
4. Insulation Resistance: 1000MΩ min. @ 500 VDC
5. Dielectric Strength: 750 VAC 50Hz, 1 min.
Environmental:
1. Storage: -40°C To +85°C
2. Operation: -40°C~+85°C
3. Wave Soldering Temp: 200~220°C(5~10S)
Packing: Tray

Order code: A-2014-1-X-N-T

Contact plating:
1: 15u" gold
2: 30u" gold
3: 50u" gold
4: 6u" gold

RoHS compliant
Unit:mm

Scale	Free					Date	Name	Customer-No.
TOLERANCE					Drawn	27.05.2013	Amy	
X.X	±0.20				Approved	24.11.2015	Amy	ASSMANN WSW-No. A-2014-1-X-N-T
X.XX	±0.15							
X.XXX	±0.10							
DIM	TOL	1	Change the integrated part into assemble part version	24.11.2015	Amy			Drawing-No. ASS 5702 CO rev01
		0	Drawn	27.05.2013	Amy			
Angle	±5°	Id.	Modification	Date	Name			Replace SHEET

ASSMANN WSW components