THIS DRAWING IS UNPUBLISHED. RELEASED FOR PUBLICATION -,- .
© COPYRIGHT - BY TYCO ELECTRONICS CORPORATION. ALL RIGHTS RESERVED.

LOC	DIST
AA	22

REVISIONS

P	LTR	DESCRIPTION	DATE	DWN	APVD
	B	REV PER ECO-08-021855	07APR2008	SX	TX
	C	ECO-11-015766	30MAY2011	EL	LR

MECHANICAL:

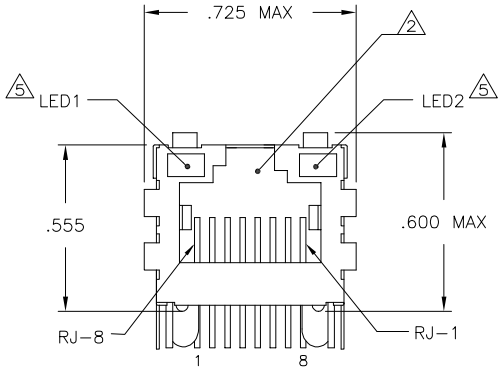

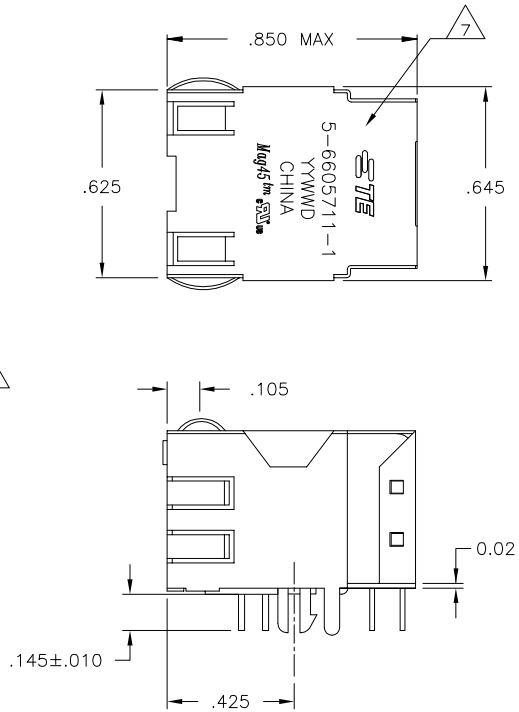

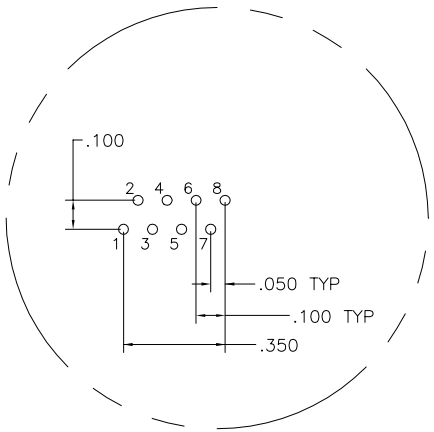

Pin Designations

714ET SERIES MAGNETIC SCHEMATIC 3 6

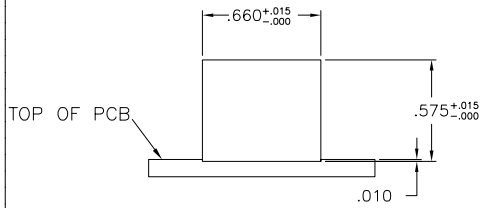

Suggested Panel Cutout

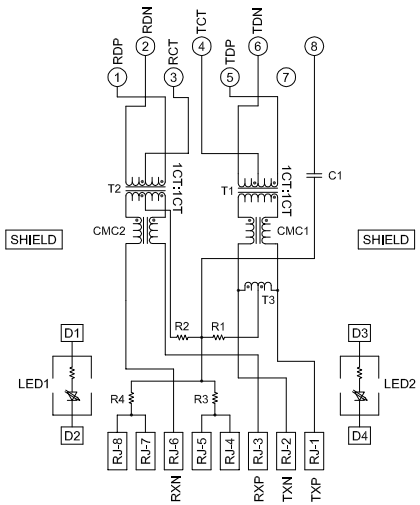

C1=1000pF. 2kV DECOUPLING CAPACITOR
R1-R4 = 75 OHMS, 1/16 W RESISTORS

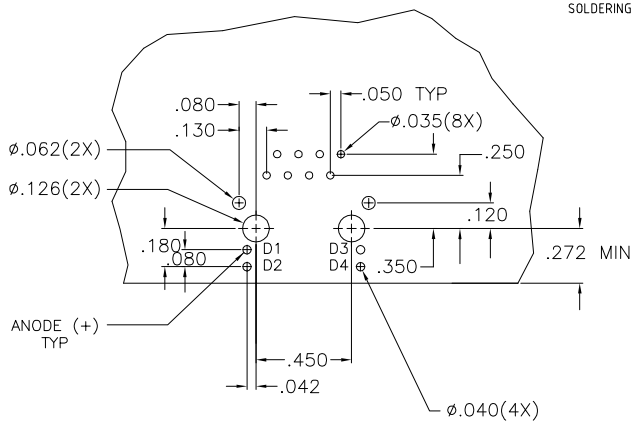

Suggested PCB Layout
(Component Side)

1 MATERIALS:
HOUSING - THERMOPLASTIC PET POLYESTER FLAMMABILITY RATING UL 94V-0.
SHIELD - .010" THICK, C26800 BRASS PREPLATED WITH 30µINCH MIN SEMI-BRIGHT NICKEL. SOLDER TABS POST DIPPED WITH 100µINCH MIN SAC SOLDER.
MOD JACK CONTACTS - 0.0157 X 0.018" PHOSPHOR BRONZE, 50µINCH MIN OVERALL NICKEL UNDERPLATE WITH SELECT 50µINCH MIN HARD GOLD FINISH PLATE.
SOLDERTAILS WITH 100µINCH MIN MATTE TIN AND/OR SAC SOLDER DIP.
LIGHT EMITTING DIODE(LED) - DIFFUSED EPOXY LENS, .020" X .020" CARBON STEEL WIREFRAME LEADS PRE-PLATED WITH 80µINCH SILVER OVER 40µINCH NICKEL UNDERPLATE OVER 40µINCH COPPER UNDERPLATE. POST-PLATED WITH 100µINCH MIN MATTE TIN AND/OR SAC SOLDER DIP OR PURE TIN SOLDER DIP.

2 RJ45 JACK CAVITY CONFORMS TO FCC RULES AND REGULATIONS PART 68, SUB PART F.

3 MAGNETICS
-IMPEDANCE: 100 OHMS
-TURNS RATIO (CHIP:CABLE): TX = 1:1, RX = 1:1
-OPEN CIRCUIT INDUCTANCE (OCL): 350µH MIN @100kHz, 0.1VRMS, 8mADC BIAS FROM -40°C TO +85°C, TX AND RX
-PERFORMANCE @ 25°C:
INSERTION LOSS (IL): 1.1dB MAX FROM 0.5MHz TO 100MHz
RETURN LOSS (RL): 18dB MIN FROM 0.5MHZ TO 30MHz
18-20LOG(f/30)dB MIN FROM 30.1MHz TO 60MHz
12dB MIN FROM 60.1MHz TO 80MHz
CROSSTALK ATTENUATION: 35dB MIN FROM 0.5MHz TO 40MHz
33-20×LOG(f/50)dB MIN FROM 40.1MHz TO 100MHz
COMMON MODE REJECTION RATIO (CMRR): 30dB MIN FROM 0.5MHz TO 100MHz
-ISOLATION VOLTAGE:2250VDC (MAX) FOR 60 SECONDS WITH A RISE TIME OF 500V/SEC.

4. OPERATING TEMPERATURE: FROM -40° - +85°C.

5 LED WITH 250 OHM RESISTORS,LED IS DRIVEN WITH 5V VOLTAGE AND THE MAX OPERATING CURRENT IS 20mA.
LED COLOR : DOMINANT WAVELENGTH (λD): GREEN 568 nm TYP. At VF=5V
FORWARD CURRENT (IF): GREEN 12 mA TYP. at VF=5V
DOMINANT WAVELENGTH (λD): YELLOW 588 nm TYP. At VF=5V
FORWARD CURRENT (IF): YELLOW 13 mA TYP. at VF=5V

6 INDICATED CONNECTIONS ARE FOR NIC CONFIGURATION. THE MAGNETICS ARE ASYMMETRICAL, AND THEREFORE ARE NOT AUTO-MDI/MDIX CAPABLE.

7 TYCO ELECTRONICS LOGO, PART NUMBER, DATE CODE, COUNTRY OF ORIGIN AND AGENCY APPROVAL MARKING IN APPROXIMATE LOCATION SHOWN.

8. THESE PARTS ARE RECOMMENDED FOR WAVE SOLDERING PROCESS, PREHEAT TEMPERATURE IS 120°C TO 160°C, 120 SECONDS TO 180 SECONDS, PEAK WAVE SOLDERING TEMPERATURE IS 260°C MAX,10 SECONDS MAX.

YES	GREEN	YELLOW	5-6605711-1
NO	GREEN	YELLOW	6605711-1
2kV DECOUPLING CAPACITOR	5 LED1	5 LED2	PART NUMBER

THIS DRAWING IS A CONTROLLED DOCUMENT.
DIMENSIONS: INCHES
TOLERANCES UNLESS OTHERWISE SPECIFIED: 0 PLC ± - ; 1 PLC ± - ; 2 PLC ± .010 ; 3 PLC ± .005 ; 4 PLC ± - ; ANGLES ± -
MATERIAL 1
FINISH 1

DWN 10MAR05 G. ATTADIA - DOCK5
CHK 10MAR05 D. FAROLE
APVD 10MAR05 D. FAROLE
PRODUCT SPEC 108-2100
APPLICATION SPEC —
WEIGHT —

TE Connectivity

NAME 1X1 MAG45(TM) MODULAR JACK, 7N2ET INDUSTRIAL TEMP SCHEMATIC, 714 SERIES CIRCUIT, SHIELDED, DECOUPLING CAPACITOR, WITH RESISTOR LEDS

SIZE	CAGE CODE	DRAWING NO	RESTRICTED TO
A1	00779	C-6605711	—

CUSTOMER DRAWING SCALE NTS SHEET 1 OF 1 REV C