MODEL: MAX2M080160

ELECTRICAL SPECIFICATIONS

Input frequency range	4 – 8 GHz minimum
Output frequency range	8 – 16 GHz minimum
Input power range	8 – 12 dBm nominal
Conversion loss	0 dB typical
Optional input/output power MAX2J080160 MAX2H080160 MAX2V080160	 3–8 dBm 12–16 dBm 16–20 dBm
Harmonic rejection Fundamental Odd harmonic	 20 dB typical 20 dB typical
DC voltage/current	+15 volts @ 160 mA typical

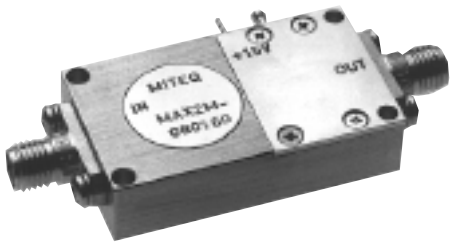

OUTPUT POWER VS. FREQUENCY

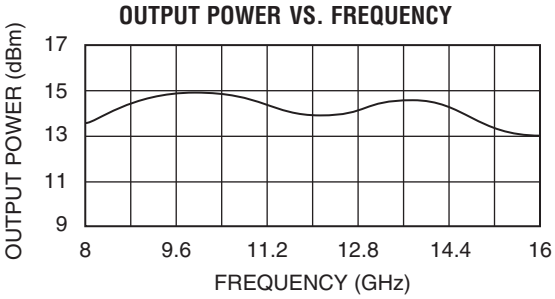

FUNDAMENTAL REJECTION VS. FREQUENCY (P_{IN} = +10 dBm)

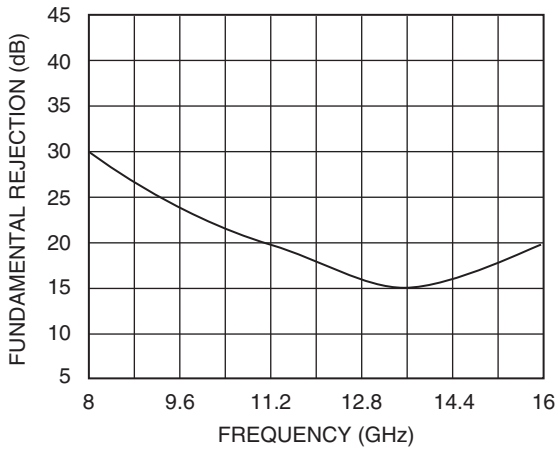

OUTLINE DRAWING

MAX2B

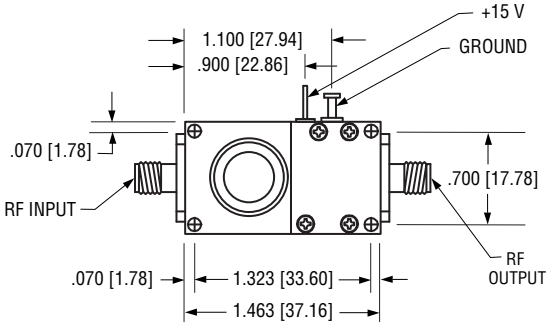

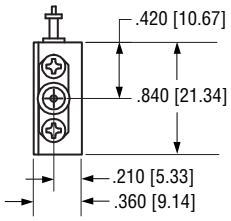

NOTE:
1. All dimensions shown in brackets [ ] are in millimeters.