ITEM NO.	PART NUMBER	DESCRIPTION	QTY.	NOTES
1	50-00024	Connector, dc plug, 5.5x2.1xL23 mm, molding style, spring contacts	1	
2	30-00418	Wire, 2C TS, 24 AWG, UL2468, 300V, 80°C, 3.0 mm, VW-1, PVC, red and black	1	
3	24-00003	Overmold	1	

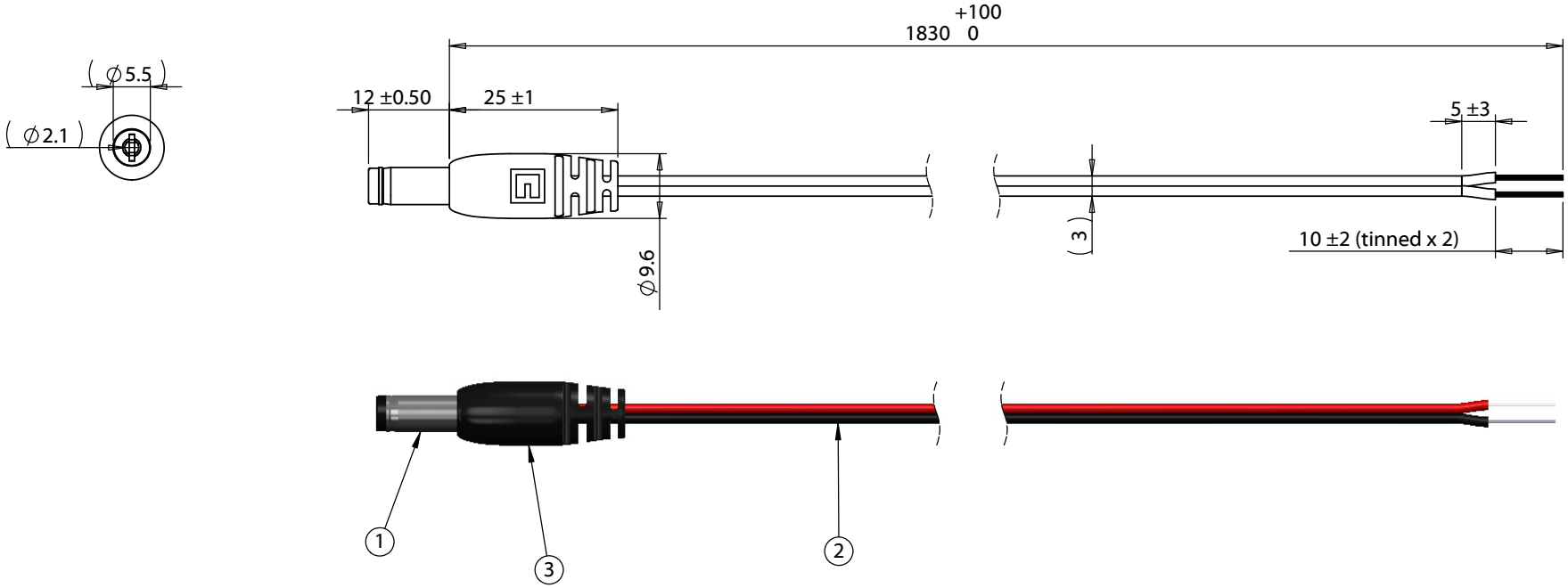

Wiring Diagram	
50-00024	Wire
Sleeve	Black
Center	Red

Notes:
Functionally equivalent components may be substituted

Revision:	Date:	Description:
A	4/10/2015	Initial release
A1	4/30/2015	Updated notes section

Prepared: AG Digitally signed by AG Date: 2018.06.28 15:56:28 -07'00'

Verified: AW Digitally signed by AW Date: 2018.06.28 16:24:21 -07'00'

Dimensions are in millimeters.
Tolerances:
X: ± 0.5 mm
X.X: ± 0.3 mm
X.XX: ± 0.05 mm

Notes:

RoHS compliant

Function test: no open, no short circuit, no intermittent

Description:

Cable, 1830 mm, 5.5x2.1x12 mm 50-00024 dc plug to stripped tinned, 24 AWG, 30-00418 R-B wire

TENSILITY
tel 1.541.323.3228 800 877.670.7118
fax 1.541.323.4202 web tensility.com

Size: A
Part number: 10-01936
Scale: 1:2
Sheet 1 of 1

To see a custom version of this cable assembly, call Tensility at 541-323-3228 or email engineering@tensility.com

5 4 3 2 1