REVISION #				REVISION HISTORY		
SD	PC	AD	FD	DESCRIPTION	DATE	APPROVED
0	0	0	0	1st Release		
2	2	2	2		05/26/09	T. Gross

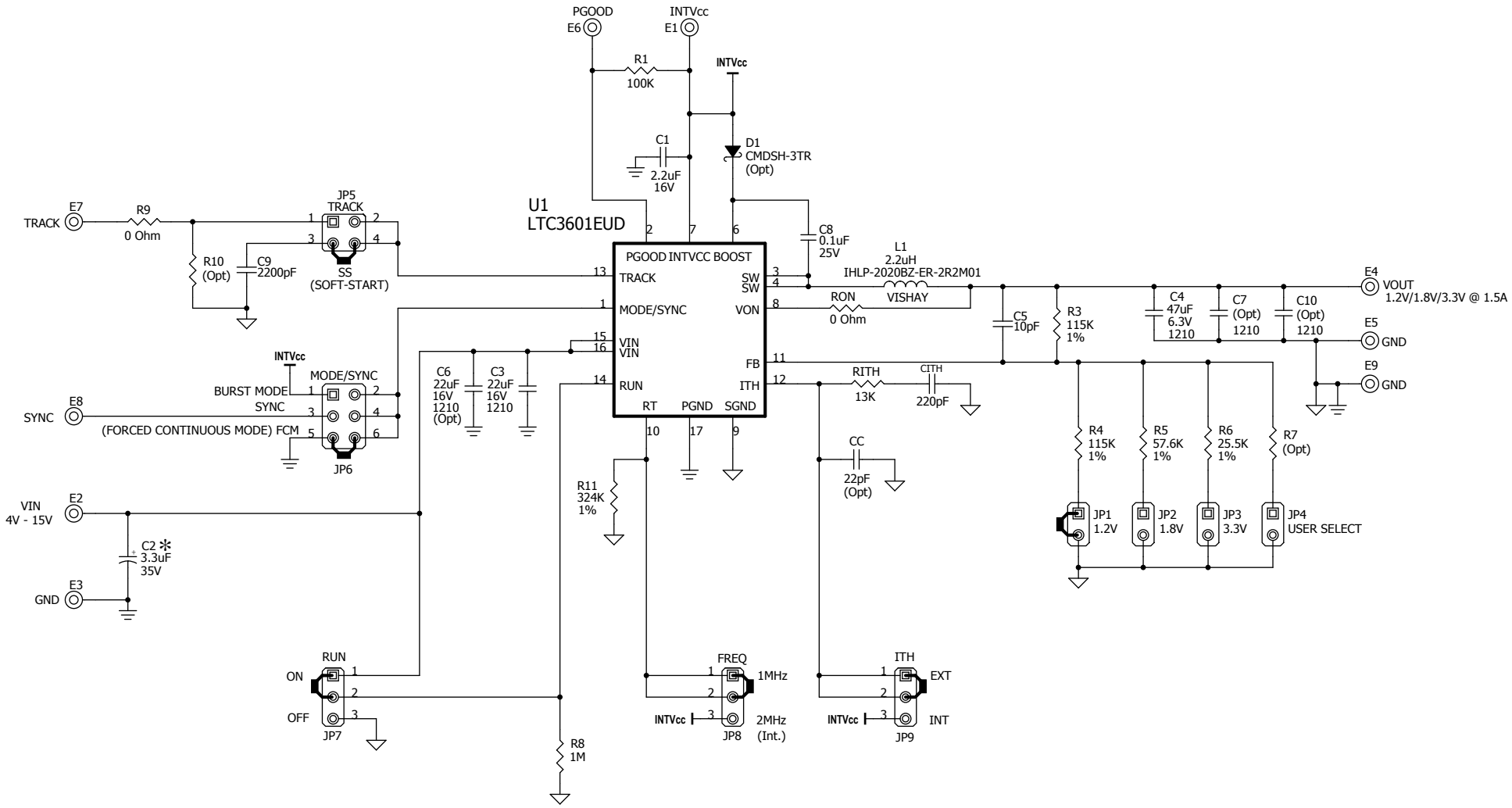

*

C2 IS AN OPTIONAL CAPACITOR. IT IS INSERTED ON THE DC1353A TO DAMPEN THE (POSSIBLE) RINGING VOLTAGE DUE TO THE LONG INPUT LEADS. ON A NORMAL, TYPICAL PCB, WITH SHORT TRACES, THE CAPACITOR IS NOT NEEDED.

This circuit is proprietary to Linear Technology and supplied for use with Linear Technology parts.
Customer Notice: Linear Technology has made a best effort to design a circuit that meets customer-supplied specifications; however, it remains the customers responsibility to verify proper and reliable operation in the actual application. Component substitution and printed circuit board layout may significantly affect circuit performance or reliability. Contact Linear Applications Engineering for assistance.

APPROVALS

DRAWN: Rudy Bautista
ENGINEER: Tom Gross
APPROVED:
CHECKED:
Date: Friday, July 24, 2009

LINEAR TECHNOLOGY CORPORATION
1630 McCARTHY BLVD
MILPITAS, CA. 95035
(408)432-1900
(408)434-0507 (FAX)
www.linear.com
LTC Confidential - For Customer Use Only

Title: LTC3601EUD
1.5A Monolithic Synchronous Buck Regulator

SD | Document Number: Demo Circuit 1353A | Rev 2

C:\ORCADWIN\CAPTURE\1353A\1353A_REV2.DSN | Sheet 1 of 1