MICRO SWITCH
FREEPORT, ILLINOIS, U.S.A.
A DIVISION OF HONEYWELL
FED. MFG. CODE 91929

SWITCH-BASIC

CATALOG LISTING
V3-19
CK-A1900

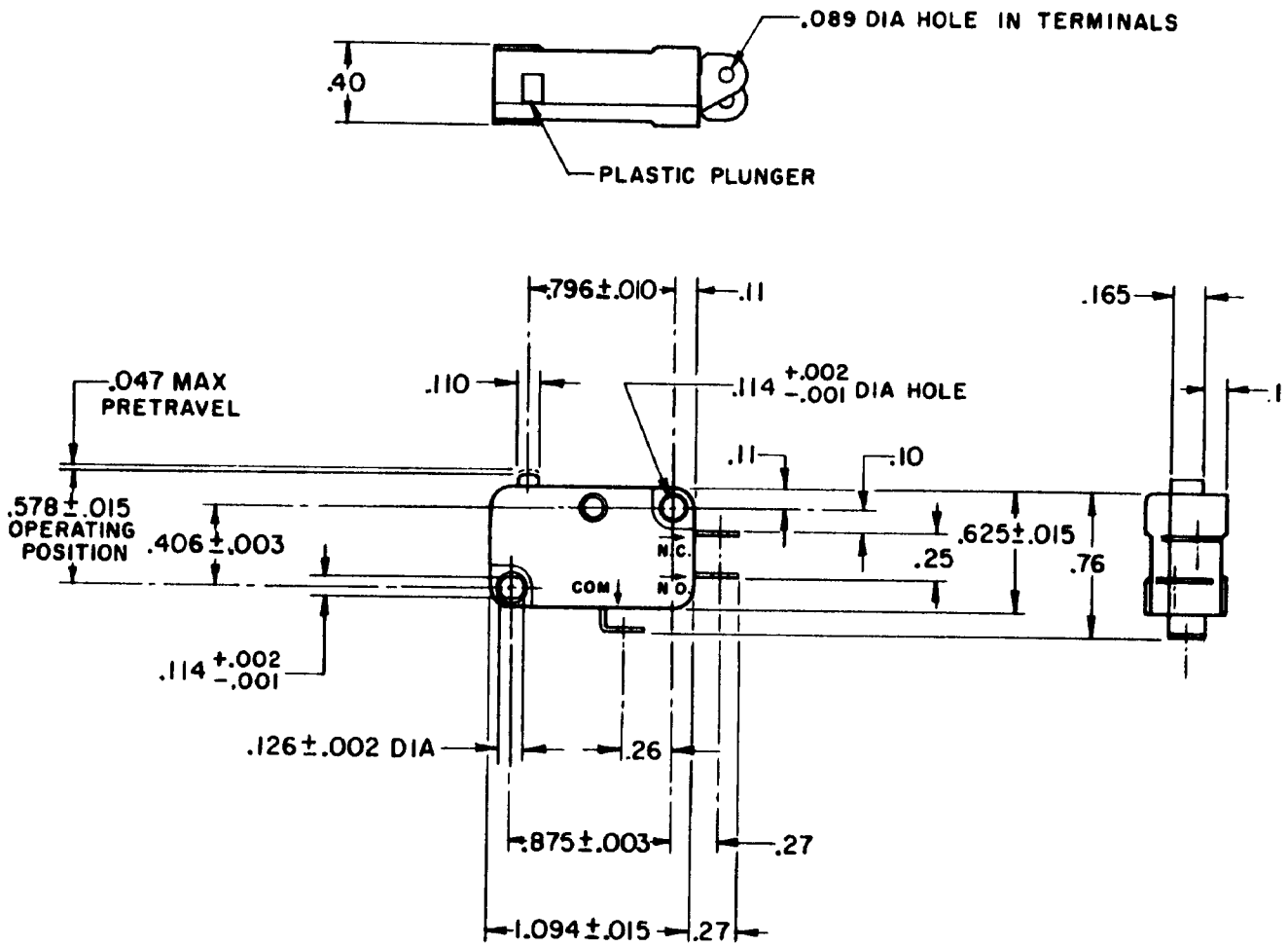

NOTE -
1 - TERMINALS ARE PLATED FOR SOLDERING

THIS DRAWING COVERS A PROPRIETARY ITEM AND IS THE PROPERTY OF MICRO SWITCH, A DIVISION OF HONEYWELL. THIS DRAWING IS NOT TO BE COPIED OR USED WITHOUT THE APPROVAL OF MICRO SWITCH.

CHARACTERISTICS

OPERATING FORCE	6 - 14 OZ
RELEASE TRAVEL	.007 MIN
RELEASE FORCE	4 OZ MIN
DIFFERENTIAL TRAVEL	.006 - .016
OVERTRAVEL	.040 MIN
FREE POSITION	.625 MAX

ELECTRICAL DATA

CONTACT ARRANGEMENT
S P D T

L83
15.1A 1/2HP 125 OR 250 VAC
1/2A 125 VDC, 1/4A 250 VDC
5A 125 VAC "L"

SCALE FULL
DO NOT SCALE PRINT

UNLESS OTHERWISE NOTED
DIMENSIONS ARE IN INCHES
TOLERANCES ARE:

ONE PLACE	(.0)	±.030
TWO PLACE	(.00)	±.015
THREE PLACE	(.000)	±.005
ANGLES		±

WEIGHT .016 LB

V3-19 | M | DRAWING NUMBER | ISSUE 12 | REPLACES | RELEASE NO. | CHECK | CHECK | CHECK | CHECK | DRAWN

REVISIONS
A C020189 M B F 12 MAY 65
B C021900 D W C 6 JAN 67
C C031509 R E R 22 JAN 73
D C0 50887 S M A 1 OCT 85
E C074635 K D R 7 MAY 93

FO-50378