Data sheet | Item number: 750-8210/040-000

Controller PFC200; 2nd Generation; 4 x ETHERNET; Extreme

www.wago.com/750-8210/040-000

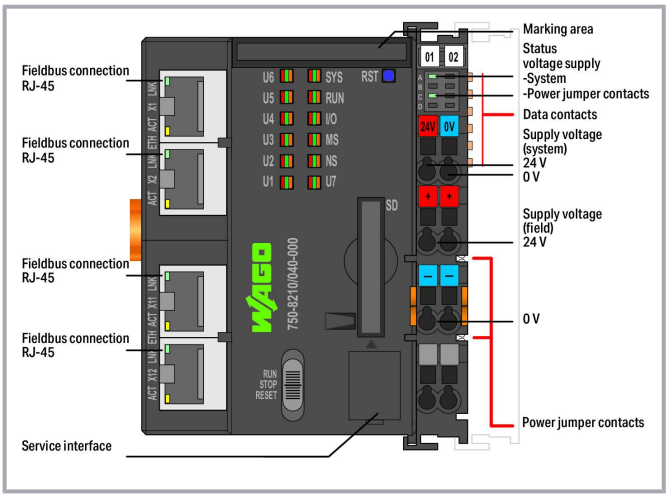

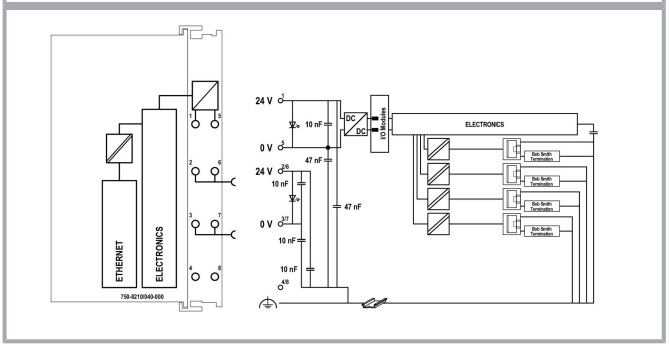

Subject to changes. Please also observe the further product documentation!

WAGO GmbH & Co. KG
Hansastr. 27
32423 Minden
Phone: +49571 887-0 | Fax: +49571 887-169
Email: info.de@wago.com | Web: www.wago.com

Do you have any questions about our products?
We are always happy to take your call at +49 (571) 887-44222.

PFC200 XTR Communication Options Overview

		On Board									Product extensions					
	CPU	Modbus (TCP), Modbus (UDP)**	EtherNet/IP	PROFIBUS	CANopen	EtherCAT	OPC UA Server/Client OPC UA Pub/Sub (can be installed later)	Modbus (RTU)**	Telecontrol Protocols	IoT Protocols	BACnet/IP 2789-2602/11-1000 or 2789-2602/11-1000	Telecontrol Protocols IEC 60870 Slave 2789-2602/11-1000 IEC 60870 Master 2789-2602/11-1000 IEC 60870 Slave 2789-2602/11-1000 DNP3 Slave 2789-2602/11-1000 DNP3 Master 2789-2602/11-1000	Multi Cloud Connectivity 2789-2602/11-1000	Sparkplug 2789-2602/11-1000	Description	Item No.
	Cortex A8; 1 GHz	M/S	M/S			M	x	x		x	x*	x*	x*	x*	Controller PFC200; 2nd Generation; 4 x ETHERNET; Extreme	750-8210/040-000
	Cortex A8; 1 GHz	M/S	M/S			M	x	x		x	x*	x*	x*	x*	Controller PFC200; 2nd Generation; 2 x ETHERNET, 2 x SFP Ports; Extreme	750-8211/040-000
	Cortex A8; 1 GHz	M/S	M/S			M	x	x		x	x*	x*	x*	x*	Controller PFC200; 2nd Generation; 2 x ETHERNET, RS-232/-485; Extreme	750-8212/040-000
		M/S	M/S			M	x	x	x	x	x*		x*	x*	Telecontrol Technology; Extreme	750-8212/040-001
	Cortex A8; 1 GHz	M/S	M/S			M	x	x		x	x*	x*	x*	x*	Controller PFC200; 2nd Generation; 2 x ETHERNET M12, RS-232/-485; Extreme	750-8212/040-010
	Cortex A8; 1 GHz	M/S	M/S		M/S	M	x			x	x*	x*	x*	x*	Controller PFC200; 2nd Generation; 2 x ETHERNET M12, CAN, CANopen; Extreme	750-8213/040-010
	Cortex A8; 1 GHz	M/S	M/S	S	M/S	M	x	x		x	x*	x*	x*	x*	Controller PFC200; 2nd Generation; 2 x ETHERNET, RS-232/-485, CAN, CANopen, PROFIBUS Slave; Extreme	750-8216/040-000

M: Master, S: Slave; *requires an additional license; **WagoAppPlcModbus Library

Item description

The PFC200 Controller is a compact PLC for the modular WAGO-I/O-SYSTEM. Besides network and fieldbus interfaces, the controller supports all digital, analog and specialty modules found within the 750/753 Series.

Four ETHERNET interface and an integrated switch enable line aswell star topology wiring. An integrated Webserver provides user configuration options, while displaying PFC200 status information.

In addition to the processing industry and building automation, typical applications for the PFC200 include standard machinery and equipment control (e.g., packaging, bottling and manufacturing systems, as well as textile, metal and wood processing machines).

Advantages:

- Programming per IEC 61131-3
- Programmable via CODESYS 3.5 with FW23 and above
- Programmable via WAGO-I/O-PRO V2.3 or ***e!COCKPIT*** with FW22
- Direct connection of WAGO I/O modules
- 4 x ETHERNET (configurable)

Subject to changes. Please also observe the further product documentation!

WAGO GmbH & Co. KG
Hansastr. 27
32423 Minden
Phone: +49571 887-0 | Fax: +49571 887-169
Email: info.de@wago.com | Web: www.wago.com

Do you have any questions about our products?
We are always happy to take your call at +49 (571) 887-44222.

- Linux® operating system with RT-Preempt patch
- Configuration via CODESYS, *e!COCKPIT* or Web-Based Management user interface
- Maintenance-free

The device is ideal for operation in extreme environments thanks to:

- Extended temperature range
- Greater immunity to impulse voltages and electromagnetic interference
- Higher vibration and shock resistance

Data

Technical data

Communication	Modbus TCP master/slave Modbus (UDP), WagoAppPlcModbus Library Modbus (RTU), WagoAppPlcModbus Library ETHERNET EtherNet/IP™ Adapter (slave) EtherNet/IP™ Scanner EtherCAT® Master OPC UA Server/Client OPC UA Pub/Sub (can be installed later) MQTT BACnet/IP, **requires an additional license** Telecontrol protocols, **requires an additional license**
ETHERNET protocols	DHCP DNS NTP FTP FTPS SNMP HTTP HTTPS SSH
Telecontrol protocols	IEC 60870 (additional license as slave or master) IEC 61850 (additional license as Client or Server) DNP3 (additional license as Slave or Master) IEC 60870-5-101/-103/-104 (additional license as slave or master) IEC-61850 (additional license as Client 300) DNP3 (additional license as Slave or Master 300) IEC 60870-5-101/-103/-104 (Zusatzlizenz als Slave oder Master) IEC-61850 (Zusatzlizenz als Client 300) DNP3 (Zusatzlizenz als Slave oder Master 300)

Subject to changes. Please also observe the further product documentation!

WAGO GmbH & Co. KG
Hansastr. 27
32423 Minden
Phone: +49571 887-0 | Fax: +49571 887-169
Email: info.de@wago.com | Web: www.wago.com

Do you have any questions about our products?
We are always happy to take your call at +49 (571) 887-44222.

Visualization	Web-Visu Web Visu
Operating system	Real-time Linux (with RT-Preempt patch)
CPU	Cortex A8; 1 GHz
Programming languages per IEC 61131-3	Instruction List (IL) Ladder Diagram (LD) Function Block Diagram (FBD) Continuous Function Chart (CFC) Structured Text (ST) Sequential Function Chart (SFC)
Programming environment	CODESYS V3.5, from firmware release 23 *e!COCKPIT* (based on CODESYS V3), up to firmware release 22 WAGO-I/O-*PRO* V2.3 (based on CODESYS V2.3), up to firmware release 22
Configuration options	CODESYS V3 *e!COCKPIT* WAGO-I/O-*CHECK* Web-Based Management *e!RUNTIME* library CODESYS Library
Baud rate (communication/fieldbus 1)	10/100 Mbit/s
Baud rate	ETHERNET: 10/100 Mbit/s
Transmission medium (communication/fieldbus)	ETHERNET: Twisted Pair S-UTP; 100 Ω; Cat. 5; 100 m maximum cable length
Main memory (RAM)	512 MB
Internal memory (flash)	4096 MB
Non-volatile hardware memory	128 Kbytes
Program memory	CODESYS V2: 16 MB; CODESYS V3: 32 MB
Data memory	CODESYS V2: 64 MB; CODESYS V3: 128 MB
Non-volatile software memory	128 Kbytes
Non-volatile software memory	128. Kbytes
Type of memory card	SD and SDHC up to 32 GB (all guaranteed properties only valid with WAGO Memory Card)
Memory card slot	Push-push mechanism; Cover lid (sealable)
Number of modules per node (max.)	64
Input and output process image (internal) max.	1000 words/1000 words
Input and output process image (Modbus®) max.	CODESYS V2: 1000 words/1000 words; CODESYS V3: 32000 words /32000 words
Indicators	LED (SYS, RUN, I/O, U1 … U7) red/green/orange: Status of system, program, local data bus, status programmable by user (can be used via CODESYS library); LED (A, C) green: Status of system power supply, field supply

Subject to changes. Please also observe the further product documentation!

WAGO GmbH & Co. KG
Hansastr. 27
32423 Minden
Phone: +49571 887-0 | Fax: +49571 887-169
Email: info.de@wago.com | Web: www.wago.com

Do you have any questions about our products?
We are always happy to take your call at +49 (571) 887-44222.

Derating	Derating (supply voltage): Surrounding air temperatures under laboratory conditions: (-25 … +30 %); for -40 … +55 °C: 24 V (-25 … +20 %); for +55 … +70 °C: 24 V (-25 … +10 %); Lower limit in all temperature ranges: −27.5 % (including 15 % residual ripple)
Supply voltage (system)	24 VDC; via pluggable connector (CAGE CLAMP® connection); Derating must be observed!
Input current (typ.) at nominal load (24 V)	500 mA
Total current (system supply)	1,700 mA
Supply voltage (actuator)	N/A N/A
Supply voltage (field)	24 VDC; Power supply via pluggable connector (CAGE CLAMP® connection); Transmission via power jumper contacts; Derating must be observed!
Current carrying capacity (power jumper contacts)	10 A
Number of outgoing power jumper contacts	2
Rated surge voltage	1 kV

Connection data

Connection technology: communication/fieldbus	Modbus (TCP, UDP): 4 x RJ-45
Connection technology: system supply	2 x CAGE CLAMP®
Connection technology: field supply	4 x CAGE CLAMP®
Connection type 1	System/field supply
Solid conductor	0.25 … 2.5 mm² / 24 … 14 AWG
Fine-stranded conductor	0.25 … 2.5 mm² / 24 … 14 AWG
Strip length	8 … 9 mm / 0.31 … 0.35 inches
Connection technology: device configuration	1 x Male connector; 4-pole

Physical data

Width	78.6 mm / 3.094 inches
Height	100 mm / 3.937 inches
Depth	71.9 mm / 2.831 inches
Depth from upper-edge of DIN-rail	64.7 mm / 2.547 inches

Mechanical Data

Weight	226.3 g
Housing material	Polycarbonate; polyamide 6.6
Conformity marking	CE

Subject to changes. Please also observe the further product documentation!

WAGO GmbH & Co. KG
Hansastr. 27
32423 Minden
Phone: +49571 887-0 | Fax: +49571 887-169
Email: info.de@wago.com | Web: www.wago.com

Do you have any questions about our products?
We are always happy to take your call at +49 (571) 887-44222.

Environmental requirements

Ambient temperature (operation)	-40 … +70 °C
Ambient temperature (storage)	-40 … +85 °C
Protection type	IP20
Pollution degree	2 per IEC 61131-2
Operating altitude	without temperature derating: 0 … 2000 m; with temperature derating: 2000 … 5000 m (0.5 K/100 m); 5000 m (max.)
Relative humidity (without condensation)	95 %
Relative humidity (with condensation)	Short-term condensation per Class 3K7/IEC EN 60721-3-3 and E-DIN 40046-721-3 (except for wind-driven precipitation, water and ice formation)
Mounting position	horizontal (standing/lying); vertical
Mounting type	DIN-35 rail
Vibration resistance	per IEC 60068-2-6 (acceleration: 5g), EN 60870-2-2, IEC 60721-3-1, -3, EN 50155; EN 61373
Shock resistance	per IEC 60068-2-27 (15g/11 ms/half-sine/1,000 shocks; 25g/6 ms/1,000 shocks), EN 50155, EN 61373
EMC immunity to interference	per EN 61000-6-1, -2; EN 61131-2; marine applications; EN 50121-3-2; EN 50121-4, -5; EN 60255-26; EN 60870-2-1; EN 61850-3; IEC 61000-6-5; IEEE 1613; VDEW: 1994
EMC emission of interference	per EN 61000-6-3, -4, EN 61131-2, EN 60255-26, marine applications, EN 60870-2-1, EN 61850-3, EN 50121-3-2, EN 50121-4, -5
Exposure to pollutants	per IEC 60068-2-42 and IEC 60068-2-43
Fire load	2.541 MJ

Commercial data

ETIM 8.0	EC000236
ETIM 7.0	EC000236
PU (SPU)	1 pcs
Packaging type	BOX
Country of origin	DE
GTIN	4066966054019
Customs tariff number	85371091990

Environmental Product Compliance

CAS-No.	1303-86-2 1314-23-4 1317-36-8

Subject to changes. Please also observe the further product documentation!

WAGO GmbH & Co. KG
Hansastr. 27
32423 Minden
Phone: +49571 887-0 | Fax: +49571 887-169
Email: info.de@wago.com | Web: www.wago.com

Do you have any questions about our products?
We are always happy to take your call at +49 (571) 887-44222.

	693-98-1 7439-92-1 79-94-7
REACH Candidate List Substance	2,2',6,6'-tetrabromo-4,4'-isopropylidenediphenol 2-methylimidazole Diboron trioxide Lead Lead monoxide Perfluorobutane sulfonic acid (PFBS) and its salts Zirconium Oxide
RoHS Compliance Status	Compliant,With Exemption
RoHS Exemption	6(c) 7(a) 7(c)-I 7(c)-II
SCIP notification number (Austria)	ad05bb10-3826-40ee-82c0-756ee1ee428a
SCIP notification number (Belgium)	4e5e27e4-c11b-4bf2-b3cd-fc55ff910f23
SCIP notification number (Bulgaria)	9b75d2fd-a8b6-4e80-822f-de625140435f
SCIP notification number (Czech Republic)	6dbfe2f5-fb9f-4826-be5f-2f04060dfefb
SCIP notification number (Denmark)	cd71dcf2-0d38-4698-8fa1-ed5483f439f2
SCIP notification number (Finland)	6e3ba2ec-443a-4687-a63f-bb4eb54b034d
SCIP notification number (France)	298f84eb-81c1-44c7-9db5-f352be9f8acc
SCIP notification number (Germany)	07d63bca-e41b-402e-a011-701a5a4bff68
SCIP notification number (Hungary)	80a60acd-223b-4ffa-9756-e094846dc4ea
SCIP notification number (Italy)	645b8ad8-9bd8-4fc6-bbf5-7c88fad18c7f
SCIP notification number (Netherlands)	c8022f8a-d0cd-4d1f-9d75-339943d8c53a
SCIP notification number (Poland)	9ded8546-6489-4d70-9410-8bd4ed48fb56
SCIP notification number (Romania)	b21ba00c-0df2-4115-ab15-5c1b10a90382
SCIP notification number (Sweden)	a0b3b48a-17bd-42a2-a960-fe2e90440c32

Approvals / Certificates

General approvals

Logo	Approval	Additional Approval Text	Certificate name
	EAC Brjansker Zertifizierungsstelle	TP TC 020/2011	EAC RU C-DE.AM02.B.00087/19
	KC National Radio Research Agency	Article 58-2, Clause 3	MSIP-REM-W43-PFC750

Subject to changes. Please also observe the further product documentation!

WAGO GmbH & Co. KG
Hansastr. 27
32423 Minden
Phone: +49571 887-0 | Fax: +49571 887-169
Email: info.de@wago.com | Web: www.wago.com

Do you have any questions about our products?
We are always happy to take your call at +49 (571) 887-44222.

	UL Underwriters Laboratories Inc. (ORDINARY LOCATIONS)	-	E175199

Declarations of conformity and manufacturer's declarations

Logo	Approval	Additional Approval Text	Certificate name
	EU-Declaration of Conformity WAGO GmbH & Co. KG	-	-

Approvals for marine applications

Logo	Approval	Additional Approval Text	Certificate name
	DNV DNV Germany GmbH	DNV-CG-0339,Aug.2021	TAA00000Y7

Optional accessories

Shield termination

Shield clamping saddles

	Item no.: 790-116 Shield clamping saddle; 19 mm wide; diameter of compatible conductor; 7 … 16 mm	www.wago.com/790-116
	Item no.: 790-124 Shield clamping saddle; 27 mm wide; diameter of compatible conductor; 6 … 24 mm	www.wago.com/790-124
	Item no.: 790-108 Shield clamping saddle; 11 mm wide; diameter of compatible conductor; 3 … 8 mm	www.wago.com/790-108
	Item no.: 790-140 Shield clamping saddle; diameter of compatible conductor	www.wago.com/790-140
	Item no.: 790-216 Shield clamping saddle; 21.8 mm wide; 6 … 16 mm	www.wago.com/790-216
	Item no.: 790-220 Shield clamping saddle; 30 mm wide; 6 … 20 mm	www.wago.com/790-220
	Item no.: 790-208 Shield clamping saddle; 12.4 mm wide; 3 … 8 mm	www.wago.com/790-208

System housing

System enclosure

Subject to changes. Please also observe the further product documentation!

WAGO GmbH & Co. KG
Hansastr. 27
32423 Minden
Phone: +49571 887-0 | Fax: +49571 887-169
Email: info.de@wago.com | Web: www.wago.com

Do you have any questions about our products?
We are always happy to take your call at +49 (571) 887-44222.

	Item no.: 850-814/002-000 IP65 enclosure; Sheet steel (RAL 7035); WxHxD (200x120x200 mm); without flange plate	www.wago.com/850-814/002-000
	Item no.: 850-815/002-000 IP65 enclosure; Sheet steel (RAL 7035); WxHxD (300x120x200 mm); without flange plate	www.wago.com/850-815/002-000
	Item no.: 850-816/002-000 IP65 enclosure; Sheet steel (RAL 7035); WxHxD (400x120x200 mm); without flange plate	www.wago.com/850-816/002-000
	Item no.: 850-817/002-000 IP65 enclosure; Sheet steel (RAL 7035); WxHxD (600x120x200 mm); without flange plate	www.wago.com/850-817/002-000
	Item no.: 850-825 IP65 enclosure; Aluminium (RAL 7032); WxHxD (160x100x160 mm); 9 x M12, 4 x M20	www.wago.com/850-825
	Item no.: 850-826 IP65 enclosure; Aluminium (RAL 7032); WxHxD (240x100x160 mm); 4 x M20, 4 x M16, 14 x M12 cable grip	www.wago.com/850-826
	Item no.: 850-827 IP65 enclosure; Aluminium (RAL 7032); WxHxD (320x100x160 mm); 4 x M20, 8 x M16, 17 x M12 cable grip	www.wago.com/850-827
	Item no.: 850-827/002-000 IP65 enclosure; Aluminium (RAL 7035); WxHxD (320x100x160 mm); 4 x M20, 8 x M16, 17 x M12 cable grip	www.wago.com/850-827/002-000
	Item no.: 850-826/002-000 IP65 enclosure; Aluminium (RAL 7035); WxHxD (240x100x160 mm); 4 x M20, 4 x M16, 14 x M12 cable grip	www.wago.com/850-826/002-000
	Item no.: 850-828/002-000 IP65 enclosure; Aluminium (RAL 7035); WxHxD (480x100x160 mm); 4 x M20, 10 x M16, 35 x M12 cable grip	www.wago.com/850-828/002-000
	Item no.: 850-828 IP65 enclosure; Aluminium (RAL 7032); WxHxD (480x100x160 mm); 4 x M20, 10 x M16, 35 x M12 cable grip	www.wago.com/850-828
	Item no.: 850-834 IP65 enclosure; Polyester (RAL 7032); WxHxD (164x100x164 mm); 9 x M12, 4 x M20	www.wago.com/850-834
	Item no.: 850-835 IP65 enclosure; Polyester (RAL 7032); WxHxD (244x100x164 mm); 4 x M20, 4 x M16, 14 x M12 cable grip	www.wago.com/850-835
	Item no.: 850-836 IP65 enclosure; Polyester (RAL 7032); WxHxD (324x100x164 mm); 4 x M20, 8 x M16, 17 x M12 cable grip	www.wago.com/850-836

Memory card

Subject to changes. Please also observe the further product documentation!

WAGO GmbH & Co. KG
Hansastr. 27
32423 Minden
Phone: +49571 887-0 | Fax: +49571 887-169
Email: info.de@wago.com | Web: www.wago.com

Do you have any questions about our products?
We are always happy to take your call at +49 (571) 887-44222.

Memory card

Item no.: 758-879/000-001
Memory Card SD; SLC-NAND; 2 GByte; Temperature from -40 to 90 °C

www.wago.com/758-879/000-001

Item no.: 758-879/000-2108
Memory Card SD; pSLC-NAND; 8 GB; Temperature range: -40 to 90°C

www.wago.com/758-879/000-2108

Software

Basic version

Item no.: 2759-101/1110-2005
e!COCKPIT; Multi-User License; 05 pcs

www.wago.com/2759-101/1110-2005

Item no.: 2759-101/1110-2002
e!COCKPIT; Workstation License

www.wago.com/2759-101/1110-2002

Item no.: 2759-101/1110-2015
e!COCKPIT; Multi-User License; 15 pcs

www.wago.com/2759-101/1110-2015

Item no.: 2759-101/1110-2020
e!COCKPIT; Multi-User License; 20 pcs

www.wago.com/2759-101/1110-2020

Item no.: 2759-101/1110-2010
e!COCKPIT; Multi-User License; 10 pcs

www.wago.com/2759-101/1110-2010

Item no.: 2759-101/1110-3000
e!COCKPIT; Site License

www.wago.com/2759-101/1110-3000

Item no.: 2759-101/1110-4000
e!COCKPIT; Buy-out License

www.wago.com/2759-101/1110-4000

Item no.: 759-333
WAGO-I/O-PRO

www.wago.com/759-333

Item no.: 759-333/000-923
WAGO-I/O-PRO; USB-Set

www.wago.com/759-333/000-923

Software applications

Item no.: 2759-120/1121-1000
e!COCKPIT MTP; Single License; Online activation

www.wago.com/2759-120/1121-1000

Subject to changes. Please also observe the further product documentation!

WAGO GmbH & Co. KG
Hansastr. 27
32423 Minden
Phone: +49571 887-0 | Fax: +49571 887-169
Email: info.de@wago.com | Web: www.wago.com

Do you have any questions about our products?
We are always happy to take your call at +49 (571) 887-44222.

	Item no.: 2759-208/211-1000 Library MTP; Single License; Online activation	www.wago.com/2759-208/211-1000
	Item no.: 2759-2015/261-1000 Application Grid Gateway; Single License; Online activation	www.wago.com/2759-2015/261-1000
	Item no.: 2759-245/211-1000 Library Controller Redundancy Master; Single License; Online activation	www.wago.com/2759-245/211-1000

Marking accessories

Marker carrier

	Item no.: 750-103 Group marker carrier	www.wago.com/750-103

Marker

	Item no.: 2009-145/000-006 Mini-WSB Inline; for Smart Printer; 1700 pieces on roll; stretchable 5 - 5.2 mm; plain; snap-on type; blue	www.wago.com/2009-145/000-006
	Item no.: 2009-145 Mini-WSB Inline; for Smart Printer; 1700 pieces on roll; stretchable 5 - 5.2 mm; plain; snap-on type; white	www.wago.com/2009-145
	Item no.: 2009-145/000-002 Mini-WSB Inline; for Smart Printer; 1700 pieces on roll; stretchable 5 - 5.2 mm; plain; snap-on type; yellow	www.wago.com/2009-145/000-002
	Item no.: 2009-145/000-007 Mini-WSB Inline; for Smart Printer; 1700 pieces on roll; stretchable 5 - 5.2 mm; plain; snap-on type; gray	www.wago.com/2009-145/000-007
	Item no.: 2009-145/000-005 Mini-WSB Inline; for Smart Printer; 1700 pieces on roll; stretchable 5 - 5.2 mm; plain; snap-on type; red	www.wago.com/2009-145/000-005
	Item no.: 2009-145/000-012 Mini-WSB Inline; for Smart Printer; 1700 pieces on roll; stretchable 5 - 5.2 mm; plain; snap-on type; orange	www.wago.com/2009-145/000-012
	Item no.: 2009-145/000-023 Mini-WSB Inline; for Smart Printer; 1700 pieces on roll; stretchable 5 - 5.2 mm; plain; snap-on type; green	www.wago.com/2009-145/000-023
	Item no.: 2009-145/000-024 Mini-WSB Inline; for Smart Printer; 1700 pieces on roll; stretchable 5 - 5.2 mm; plain; snap-on type; violet	www.wago.com/2009-145/000-024

Subject to changes. Please also observe the further product documentation!

WAGO GmbH & Co. KG
Hansastr. 27
32423 Minden
Phone: +49571 887-0 | Fax: +49571 887-169
Email: info.de@wago.com | Web: www.wago.com

Do you have any questions about our products?
We are always happy to take your call at +49 (571) 887-44222.

Item no.: 248-501/000-006
Mini-WSB marking card; as card; not stretchable; plain; snap-on type; blue

www.wago.com/248-501/000-006

Item no.: 248-501/000-007
Mini-WSB marking card; as card; not stretchable; plain; snap-on type; gray

www.wago.com/248-501/000-007

Item no.: 248-501/000-002
Mini-WSB marking card; as card; not stretchable; plain; snap-on type; yellow

www.wago.com/248-501/000-002

Item no.: 248-501/000-012
Mini-WSB marking card; as card; not stretchable; plain; snap-on type; orange

www.wago.com/248-501/000-012

Item no.: 248-501
Mini-WSB marking card; as card; not stretchable; plain; snap-on type; white

www.wago.com/248-501

Item no.: 248-501/000-017
Mini-WSB marking card; as card; not stretchable; plain; snap-on type; light green

www.wago.com/248-501/000-017

Item no.: 248-501/000-005
Mini-WSB marking card; as card; not stretchable; plain; snap-on type; red

www.wago.com/248-501/000-005

Item no.: 248-501/000-024
Mini-WSB marking card; as card; not stretchable; plain; snap-on type; violet

www.wago.com/248-501/000-024

Item no.: 248-501/000-023
Mini-WSB marking card; as card; not stretchable; plain; snap-on type; green

www.wago.com/248-501/000-023

Group marker carrier

Item no.: 750-107
Group marker carrier

www.wago.com/750-107

Communication

Communication cable

Item no.: 750-923
Configuration cable; USB connector; Length: 2.5 m

www.wago.com/750-923

Subject to changes. Please also observe the further product documentation!

WAGO GmbH & Co. KG
Hansastr. 27
32423 Minden
Phone: +49571 887-0 | Fax: +49571 887-169
Email: info.de@wago.com | Web: www.wago.com

Do you have any questions about our products?
We are always happy to take your call at +49 (571) 887-44222.

	Item no.: 750-923/000-001 Configuration cable; USB connector; Length: 5 m	www.wago.com/750-923/000-001

Carrier rail

Mounting accessories

	Item no.: 210-197 Steel carrier rail; 35 x 15 mm; 1.5 mm thick; 2 m long; slotted; similar to EN 60715; silver-colored	www.wago.com/210-197
	Item no.: 210-198 Copper carrier rail; 35 x 15 mm; 2.3 mm thick; 2 m long; unslotted; according to EN 60715; copper-colored	www.wago.com/210-198
	Item no.: 210-504 Steel carrier rail; 35 x 7.5 mm; 1 mm thick; 2 m long; slotted; galvanized; according to EN 60715; silver-colored	www.wago.com/210-504
	Item no.: 210-505 Steel carrier rail; 35 x 7.5 mm; 1 mm thick; 2 m long; unslotted; galvanized; according to EN 60715; silver-colored	www.wago.com/210-505
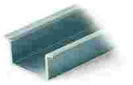	Item no.: 210-506 Steel carrier rail; 35 x 15 mm; 1.5 mm thick; 2 m long; unslotted; galvanized; similar to EN 60715; silver-colored	www.wago.com/210-506
	Item no.: 210-508 Steel carrier rail; 35 x 15 mm; 1.5 mm thick; 2 m long; slotted; galvanized; similar to EN 60715; silver-colored	www.wago.com/210-508
	Item no.: 210-113 Steel carrier rail; 35 x 7.5 mm; 1 mm thick; 2 m long; unslotted; according to EN 60715; silver-colored	www.wago.com/210-113
	Item no.: 210-118 Steel carrier rail; 35 x 15 mm; 2.3 mm thick; 2 m long; unslotted; according to EN 60715; silver-colored	www.wago.com/210-118
	Item no.: 210-112 Steel carrier rail; 35 x 7.5 mm; 1 mm thick; 2 m long; slotted; according to EN 60715; "Hole width 25 mm; silver-colored	www.wago.com/210-112
	Item no.: 210-114 Steel carrier rail; 35 x 15 mm; 1.5 mm thick; 2 m long; unslotted; similar to EN 60715; silver-colored	www.wago.com/210-114
	Item no.: 210-115 Steel carrier rail; 35 x 7.5 mm; 1 mm thick; 2 m long; slotted; according to EN 60715; "Hole width 18 mm; silver-colored	www.wago.com/210-115
	Item no.: 210-196 Aluminum carrier rail; 35 x 8.2 mm; 1.6 mm thick; 2 m long; unslotted; similar to EN 60715; silver-colored	www.wago.com/210-196

Downloads

Documentation

Manual

Subject to changes. Please also observe the further product documentation!

WAGO GmbH & Co. KG
Hansastr. 27
32423 Minden
Phone: +49571 887-0 | Fax: +49571 887-169
Email: info.de@wago.com | Web: www.wago.com

Do you have any questions about our products?
We are always happy to take your call at +49 (571) 887-44222.

Product Manual PFC200; G2; 4ETH; XTR Controller PFC200; 2nd Generation; 4 x ETHERNET; XTR	1.8.0 2023 Mar 31	pdf 4.6 MB	Download

Bid Text

750-8210/040-000 X81 - Datei		xml 11.3 kB	Download
750-8210/040-000 docx - Datei		docx 19.6 kB	Download

Additional Information

Disposal and Recycling Electrical and electronic equipment, Batteries, Packaging	V 1.1.0 2022 Aug 18	pdf 2.2 MB	Download
WAGO OPC UA Server	V 1.1.0 2021 Jan 28	pdf 1.2 MB	Download

Libraries

WAGOAppRTU_Slaves Library

WAGOAppRTU_Slaves Library Library for the IEC-60870 connection of customer systems in the German electricity network area of the network operators E.ON, Westnetz, EWE and Netz BW; the number and power of the generating plants (EZA) is increasing. In order to ensure network stability, distribution system operators require that customer facilities become controllable and switchable. This means considerable programming effort for corresponding interfaces in the network connection point (NAP). For system integrators who use WAGO telecontrol technology, however, this work is not necessary, because with the library WAGOAppRTU_Slaves they can use ready-made communication libraries - as a free download for the network areas of the E.ON and EWE, networks BW and for Westnetz.	1.9.0.0 2023 Jan 18	ZIP 2.1 MB	Download

Engineering-Software

Desktop Application

WAGOupload WAGOupload is a stand-alone PC software for transferring, backing up and restoring PLC applications on WAGO 750 Series controllers.		URL	Download

CODESYS V3 with WAGO DSP

CODESYS Development System V3 including WAGO Device Support Package Have you not yet installed CODESYS Development System V3? Would you like to program WAGO controllers? Then you've come to the right place!		URL	Download

Subject to changes. Please also observe the further product documentation!

WAGO GmbH & Co. KG
Hansastr. 27
32423 Minden
Phone: +49571 887-0 | Fax: +49571 887-169
Email: info.de@wago.com | Web: www.wago.com

Do you have any questions about our products?
We are always happy to take your call at +49 (571) 887-44222.

With CODESYS Development System V3, you program according to the IEC 61131-3 standard. The software enables graphical and textual programming. Create visualizations with the integrated visualization editor.

You benefit from several WAGO libraries that support your application.

You can find it in our WAGO Download Center:

- CODESYS V3.5.x, 64-bit
- WAGO-Plugins
- WAGO libraries
- Device firmware
- Device description for WAGO controllers
- ...as well as other WAGO tools and add-ons

WAGO DSP for CODESYS V3

WAGO Device Support Package for CODESYS Development System V3		URL	Download

Have you already installed CODESYS Development System V3 (min. V3.5.17.3) and only need WAGO libraries and device descriptions for the WAGO controllers? Then you've come to the right place!

Use your CODESYS Development System V3 and expand it with the device descriptions of the WAGO controllers and several WAGO libraries.

You can find it in our WAGO Download Center:

- WAGO-Plugins
- WAGO libraries
- Device firmware
- Device descriptions for WAGO controllers
- ...sowie weitere WAGO-Tools und Add-ons

Configuration and Commissioning Software

(759-316) WAGO Ethernet Settings / Serie 750	06.18.01.01 2023 Feb 28	zip 27.3 MB	Download

Runtime Software

Firmware

PFC200, Firmware Update für CoDeSys V3.5 WAGO_FW0750-821x_V040110_FW23	V 23 2023 Feb 24	zip 172.0 MB	Download
Image Update (SD Karte) PFC100/200 WAGO_FW0750-8xxx_V031010_IX22_SP1_I	V 22 SP1 2022 Dec 12	zip 210.8 MB	Download

WUP Update (WAGOuploadTool) PFC100/200

Subject to changes. Please also observe the further product documentation!

WAGO GmbH & Co. KG
Hansastr. 27
32423 Minden
Phone: +49571 887-0 | Fax: +49571 887-169
Email: info.de@wago.com | Web: www.wago.com

Do you have any questions about our products?
We are always happy to take your call at +49 (571) 887-44222.

WAGO_FW0750-8xxx_V031010_IX22_SP1_W	V 22 SP1 2022 Dec 12	zip 208.5 MB	Download

Software Solutions (Applications)

WAGO Application Grid Gateway

WAGO Application Grid Gateway WAGO Application Grid Gateway supports power distribution grid operators in assessing grid performance. This application allows grid operators to use their existing distribution grid more efficiently, while avoiding unnecessary grid expansion. The measurement technology required in the substations for both the transformer and low-voltage outputs can be easily retrofitted. The application can be used for a 30-day trial period at no cost, after which a license for the specific controller is required. The license can be separately purchased under Item Number 2759-2015/0261-1000.	1.0.1 2021 Jun 1	zip 512.2 MB	Download

CAD/CAE-Data

CAD data

2D/3D Models 750-8210/040-000	URL	Download

CAE data

ZUKEN Portal 750-8210/040-000	URL	Download
EPLAN Data Portal 750-8210/040-000	URL	Download

Environmental Product Compliance

Compliance Search

Environmental Product Compliance 750-8210/040-000 Controller PFC200; 2nd Generation; 4 x ETHERNET; Extreme	URL	Download

Installation Notes

Product family

Controller PFC XTR
Show all products from the family

Subject to changes. Please also observe the further product documentation!

WAGO GmbH & Co. KG
Hansastr. 27
32423 Minden
Phone: +49571 887-0 | Fax: +49571 887-169
Email: info.de@wago.com | Web: www.wago.com

Do you have any questions about our products?
We are always happy to take your call at +49 (571) 887-44222.