WIRES SPECIFICATION:
RATED VOLTAGE: 300V
RATED TEMPERATURE: 105°
PRODUCT STANDARD SPECIFICATION: UL
FLAMMABILITY TEST: VW-1, CSA FT1
AWG: 22
CONSTRUCTION: 17/0.16
INSULATION DIAMETER: 1.58 ±0.05

WIRE DIAGRAM

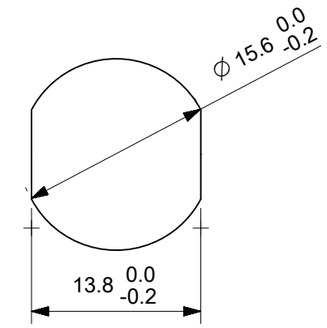

PANEL CUTOUT

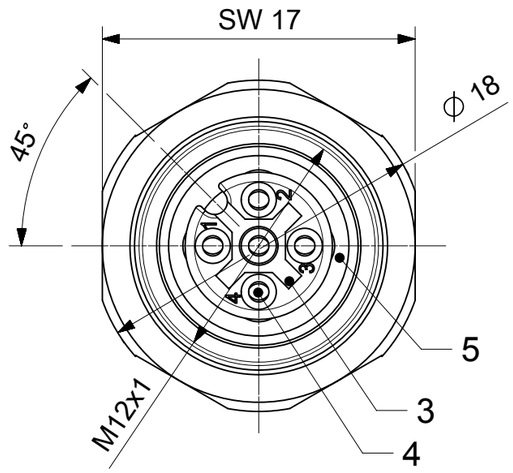

VIEW FROM THE FRONT SIDE

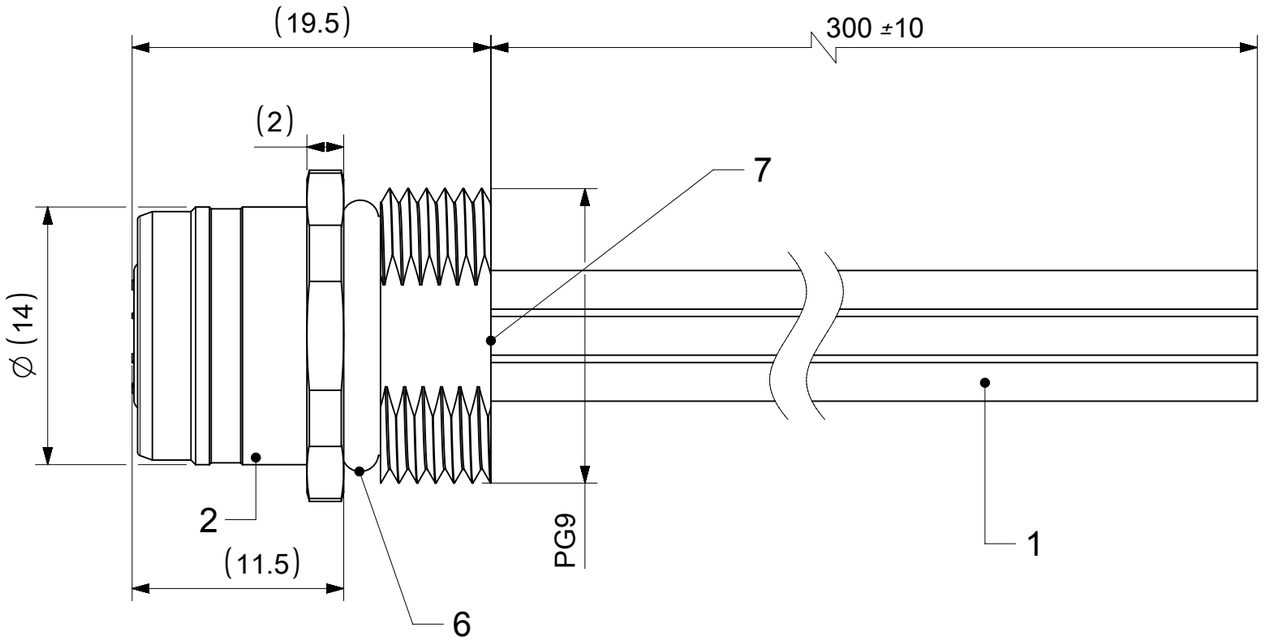

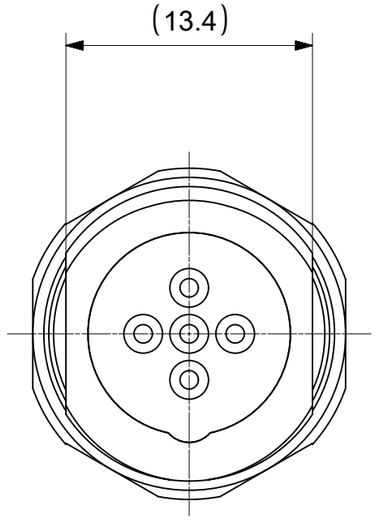

VIEW FROM THE WIRES SIDE

BILL OF MATERIALS

7	-	POTTING MATERIAL	WEVO	-
6	1	O-RING	NBR	BLACK
5	1	GASKET 7.1x1.35	FPM	RED
4	5	CONTACT 10 FE	BRONZE	GOLD OVER NICKEL PLATED
3	1	INSERT U12 FE 5P AC	PUR	BLACK
2	1	REC SHELL UL.M12(FE)xPG9(M) FRONT PANEL	BRONZE	NICKEL PLATED
1	-	WIRE;22AWG;OD=1.58mm	PVC	-
ITEM	QTY	DESCRIPTION	MATERIAL	FINISH/COLOR

DOCUMENT STATUS	P1	RELEASE DATE	2018/09/24 08:11:06

FORMAT: master-lb-prod-A3
REVISION: H
DATE: 2018/01/18

SYMBOLS: E A = 0; E C = 0; E F = 0; S = 0; ▼ = 0; C = 0; ☒ = 0; ■ = 0; = 0

THIS DRAWING CONTAINS INFORMATION THAT IS PROPRIETARY TO MOLEX ELECTRONIC TECHNOLOGIES, LLC AND SHOULD NOT BE USED WITHOUT WRITTEN PERMISSION

DIMENSION UNITS	SCALE
mm	3:1

GENERAL TOLERANCES (UNLESS SPECIFIED)

ANGULAR TOL	±	°
4 PLACES	±	
3 PLACES	±	
2 PLACES	±	0.05
1 PLACE	±	0.1
0 PLACES	±	

DRAFT WHERE APPLICABLE MUST REMAIN WITHIN DIMENSIONS

CURRENT REV DESC:

EC NO: 604801
DRWN: MKOWALCZYK01 2018/09/21
CHK'D: MIWASIECZKO 2018/09/24
APPR: MIWASIECZKO 2018/09/24

INITIAL REVISION:
DRWN: NSTAUDIGEL 2010/03/08
APPR: FPACHER 2010/03/10

THIRD ANGLE PROJECTION

molex

REC U12 XP AC FE STR PUR
XM PG9 FM WIR SE UNSH BRA AU

PRODUCT CUSTOMER DRAWING

DOCUMENT NUMBER	DOC TYPE	DOC PART	REVISION
SD-120084-030	PSD	001	A

DRAWING	SERIES	MATERIAL NUMBER	CUSTOMER	SHEET NUMBER
A3-SIZE	120084	1200845159	GENERAL MARKET	1 OF 1