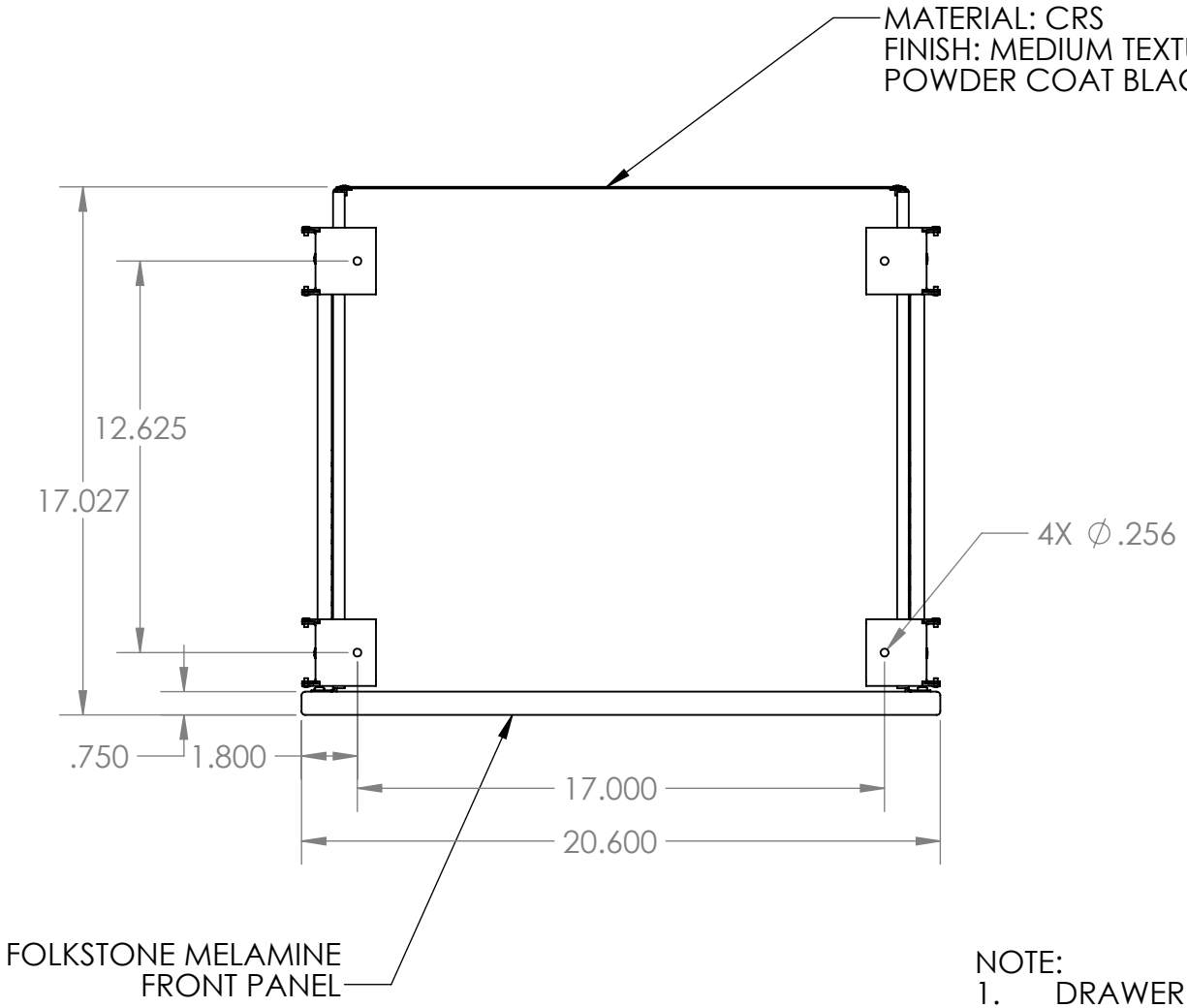

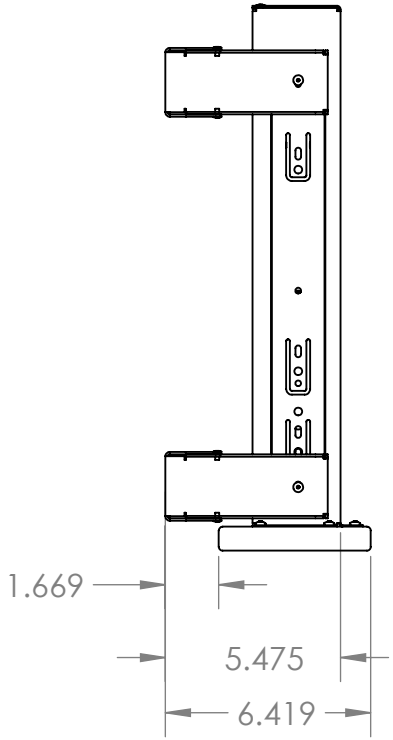

NOTE:
1. DRAWER EXTENSION, 14" @ 100lbs.
2. USABLE DRAWER INTERIOR: 18.5"W X 16.2"D X 2.7"H.

WEB PRINT

PROPRIETARY AND CONFIDENTIAL
THE INFORMATION CONTAINED IN THIS DRAWING IS THE SOLE PROPERTY OF KENDALL HOWARD. ANY REPRODUCTION IN PART OR AS A WHOLE WITHOUT THE WRITTEN PERMISSION OFKENDALL HOWARD IS STRICTLY PROHIBITED.

NEXT ASSY	USED ON
APPLICATION	

UNLESS OTHERWISE SPECIFIED:
DIMENSIONS ARE IN INCHES
TOLERANCES:
FRACTIONAL ±1/8
ANGULAR: BEND ±1°
TWO PLACE DECIMAL ±.03
THREE PLACE DECIMAL ±.010
HOLES +.003/-.002

Surface Area

MATERIAL

FINISH

DO NOT SCALE DRAWING

	NAME	DATE
DRAWN		
CHECKED		
ENG APPR.		
MFG APPR.		
Q.A.		

COMMENTS:

KENDALL HOWARD

TITLE:
SLIDING ACCESSORY
DRAWER PAN ASSY

SIZE	DWG. NO.	REV
A	5200-3-201-00 WP	-

SCALE: 1:8 | WEIGHT: 11.99 | SHEET 1 OF 1

5 4 3 2 1