THIS COPY IS PROVIDED ON A RESTRICTED BASIS AND IS NOT TO BE USED IN ANY WAY DETRIMENTAL TO THE INTERESTS OF PANDUIT CORP.

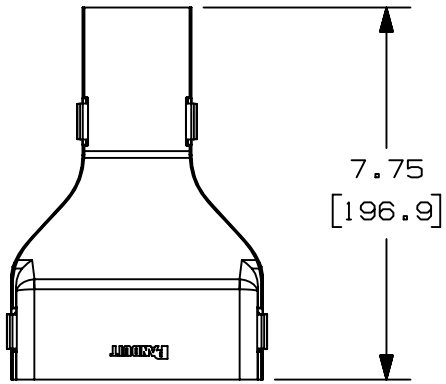

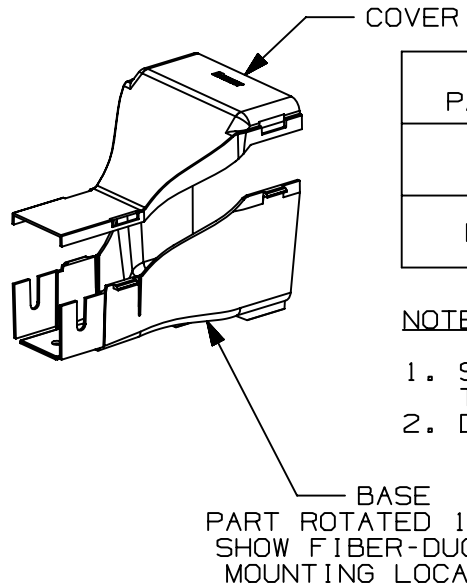

PANDUIT PART NUMBER	WEIGHT	MATERIAL
FRRF4FD2	0.44 LB/EACH (201g/EACH)	ABS
FRRF4FD2L	0.44 LB/EACH (201g/EACH)	PC/ABS

NOTES:

1. SEE CURRENT CATALOG FOR ADDITIONAL PART SUFFIXES TO INDICATE COLOR AND/OR PACKAGE QUANTITY.
2. DIMENSIONS IN PARENTHESES ARE IN METRIC.

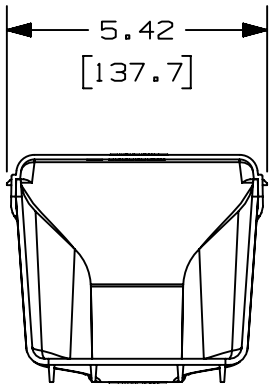

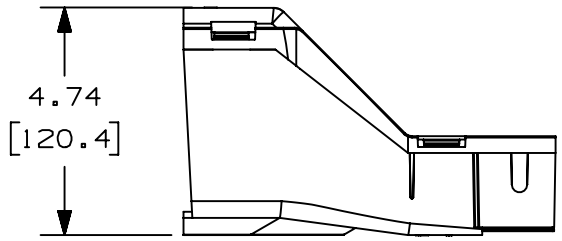

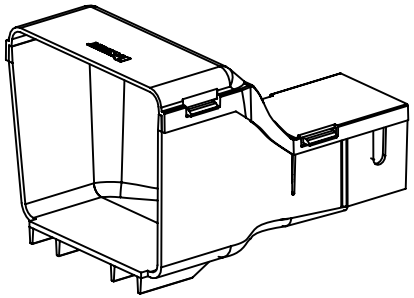

REV	DATE	BY	CHK	APR	DESCRIPTION	ECN
01B	9/2/2020	MES	DWR	DWR	UPDATED TITLE BLOCK, ADDED PART NUMBER	V09002DZ/11

TITLE

FIBERRUNNER 4x4 TO FIBER-DUCT 2x2 REDUCER (FRRF4FD2, FRRF4FD2L)

CUSTOMER DRAWING

ITEM REVISION NAME: D37847DG/01

DATASET FILE NAME: D37847DG/01

UNLESS OTHERWISE SPECIFIED, DIMENSIONAL TOLERANCES ARE:
(.X) ± (.XXX) ±
(.XX) ±.03 (.8) ANGLES ±

THIRD ANGLE PROJECTION

MATERIAL: SEE PART NUMBER TABLE ABOVE

DRAWING NUMBER: 37847-74

DRAWN BY	DATE	CHK	SCALE	SIZE
JNHU	7-19-01	HIW	NONE	A

SHT 1 OF 1

D10100DA/20