PART NO. 92307-0002
DWG. NO. SDA-92307-0002

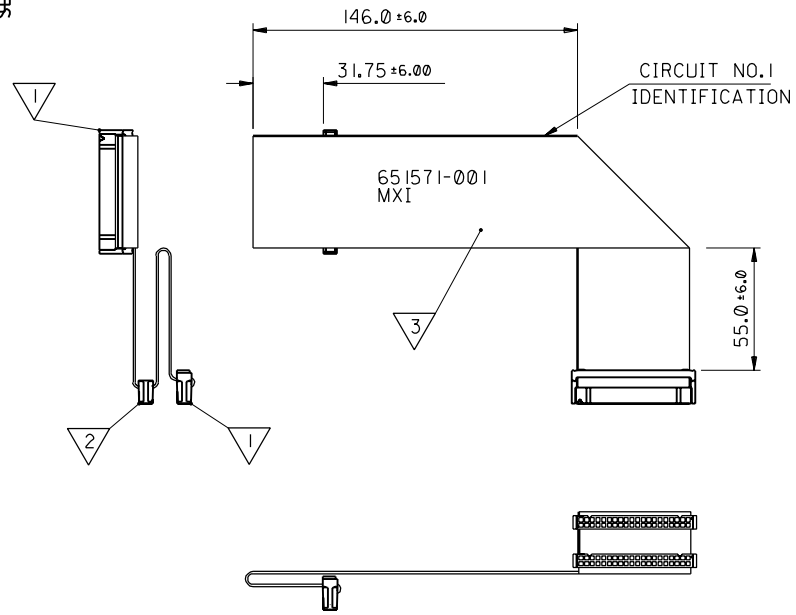

BILL OF MATERIALS

NO.	QTY	SUPPLIER	DESCRIPTION	PART No.	SEE NOTE
1	2	MOLEX	QF50 40 CCT CONNECTOR (CCT 20 VOID)	90781-9001	1,3
2	1	MOLEX	QF50 40 CCT CONNECTOR (CCT 20 VOID)	90781-9017	1,3
3			40 CCT RIBBON CABLE 28 AWG		1,2

NOTES:

1. SEE PRODUCT SPECIFICATION PS-99020-0015.
2. PRINT INTEL P/N "651571-001" APPROXIMATELY WHERE SHOWN.
   PRINT MOLEX IDENTIFICATION MARK 'MXI', APPROXIMATELY WHERE SHOWN.
   PRINT 'P1', 'P2', AND 'P3' APPROXIMATELY WHERE SHOWN.
   TEXT HEIGHT 3.2 MIN.
3. HARNESS TO BE 100% ELECTRICALLY TESTED
4. PACKAGING: PARTS TO BE PACKED LOOSELY IN BOXES.
   UL LABEL TO BE APPLIED TO EACH BOX.

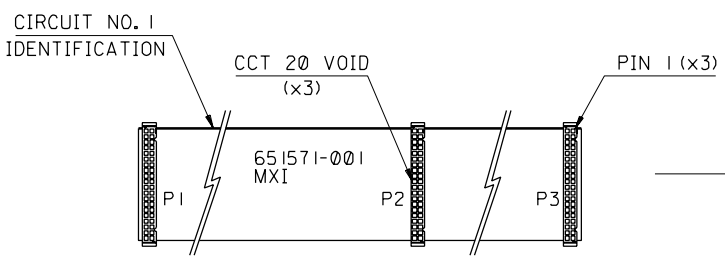

HARNESS IDENTIFICATION POSITIONS
ON PRE-FOLDED HARNESS.(SEE NOTE 2)

PART NO. MOD.
ECN E70699
97.05.06 MK

REVISIONS

A2

LTR

DIMENSIONS SHOWN (METRIC) INCH

UNLESS OTHERWISE SPECIFIED
TOLERANCES: ANGULAR ± ½°

	INCH	(METRIC)
3 PLACE	± .	
2 PLACE	± .	±
1 PLACE		±

DRAFT WHERE APPLICABLE MUST REMAIN WITHIN DIMENSIONS

DESIGN DIMENSION (PRIMARY) ☒ (MM) ☐ IN.

EQUIVALENT DIMENSION (SECONDARY) ☐ (MM) ☐ IN.

DRWG BY MK
CHK'D BY
APP'D BY
SCALE 1:2

REVISE ONLY ON CAD SYSTEM | SH. | REV.

CADCAM FILENAME S92307X2 DGN

THIS DRAWING CONTAINS INFORMATION THAT IS PROPRIETARY TO MOLEX INC. & SHOULD NOT BE USED WITHOUT WRITTEN PERMISSION

TITLE

RIBBON CABLE HARNESS

molex MOLEX EUROPE

SHEET NO. 1OF1 | DATE 97/02/14

PART NO. 92307-0002 | DWG NO. SDA-92307-0002 | SIZE B

7132-1283