THIS DRAWING IS UNPUBLISHED. RELEASED FOR PUBLICATION 20
© COPYRIGHT 20 - ALL RIGHTS RESERVED.

| LOC | DIST |
|---|---|
| FX | 00 |

REVISIONS

| P | LTR | DESCRIPTION | DATE | DWN | APVD |
|---|---|---|---|---|---|
| | D3 | Dimensions updated. ECR-07-009742 | 25APR2007 | HM | GM |
| | E | SEE ECR-11-009284 AND ECR-11-009557 | 09MAY2011 | JM | GS |
| | E1 | ECR-18-008069 | 25FEB2019 | KC | PT |

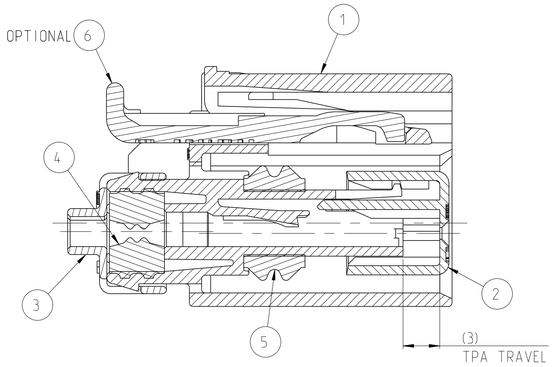


SECTION A-A
SHOWN WITH TPA
AND CPA (OPTIONAL) IN
THEIR PRE-LOADED POSITIONS

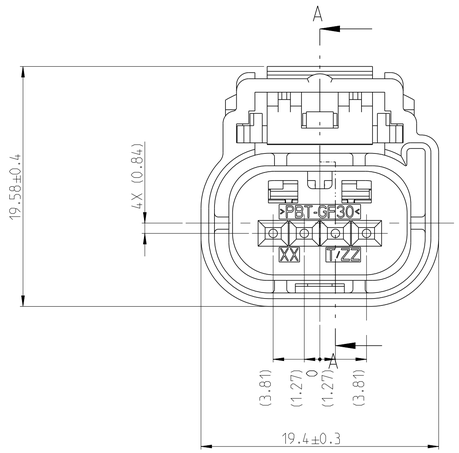


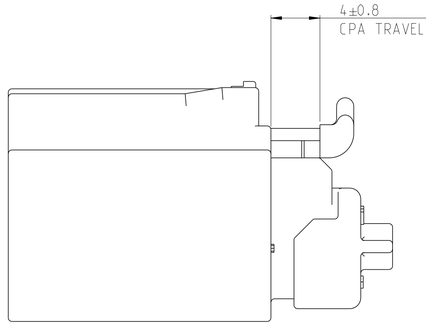


| PIN-OUT CHART | | | | |
|---|---|---|---|---|
| | | 3 | 4 | 1438188-2<br>1719256-2<br>9-1419167-9 |
| | 2 | | | 9-1419167-5<br>1-1719256-3 |
| | | | | 1719256-1<br>9-1419167-8<br>1419168-1<br>0-1419168-2<br>8-1419167-0<br>9-1419167-1<br>9-1419167-2<br>9-1419167-3 |
| 1 | 2 | 3 | 4 | ASSEMBLY PART NUMBER |
| TERMINAL HOLE POSITION | | | | |
| CAVITIES WITH A NUMERIC SYMBOL INDICATE CLOSED TERMINAL HOLE POSITIONS | | | | |
| BLANK CAVITIES INDICATE OPEN TERMINAL HOLE POSITIONS | | | | |

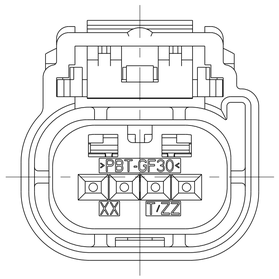


KEYING OPTION "A"

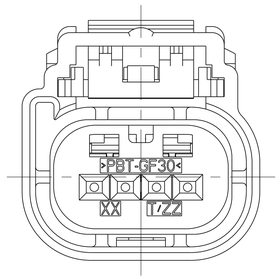


KEYING OPTION "B"

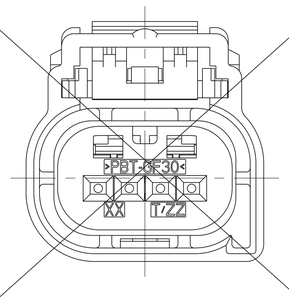


KEYING OPTION "C"

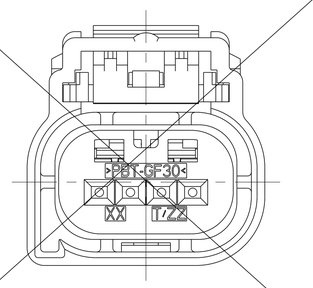


KEYING OPTION "D"

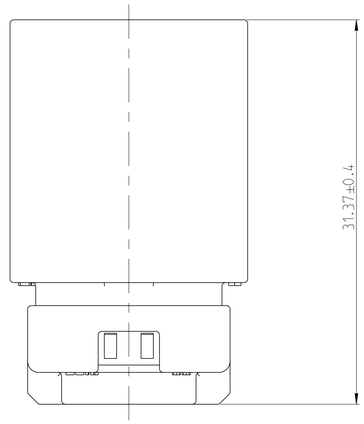


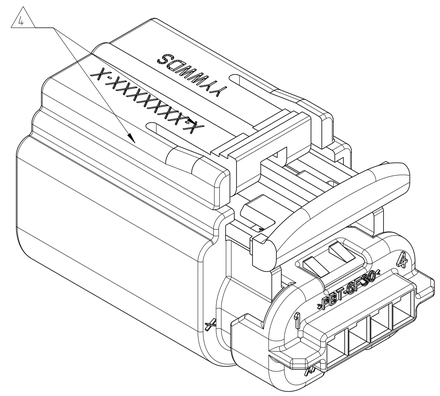


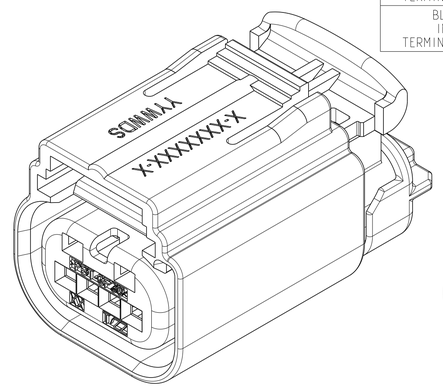


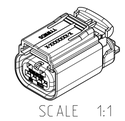

SCALE 1:1

KEYING OPTION "A" SHOWN
SEE NOTE 5 FOR APPLICABLE
HEADER INTERFACE INFORMATION

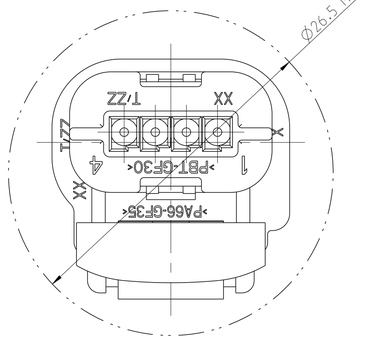


MINIMUM FEED THROUGH CONDITION
WITH 1mm CLEARANCE ALL AROUND

| E1 | | | | | | E1 | | | | E1 | | E1 | | | | | |
|---|---|---|---|---|---|---|---|---|---|---|---|---|---|---|---|---|---|
| 1-1719256-3 | | | | | | 8-1419167-0 | | | | 1438188-2 | | <--- SUPERSEDED ASSY PNS | | | |
| 1719256-3 | 1719256-2 | 1719256-1 | 9-1419167-3 | 9-1419167-2 | 9-1419167-1 | 9-1419167-5 | 9-1419167-0 | 1419168-2 | 1419168-1 | 9-1419167-9 | 1438188-1 | 9-1419167-8 | <--- ASSEMBLY PART NUMBERS | | | |
| B | B | C | | | E | E | E | | | E | E | E | ← ASSEMBLY REVISION | | | |
| 1 | | 1 | | | | | | 1 | 1 | 1 | 1 | 1 | 6 | CPA | PBT-GF15 | RED |
| 1 | 1 | 1 | 1 | 1 | 1 | 1 | 1 | 1 | 1 | 1 | 1 | 1 | 5 | PERIMETER SEAL | SILICONE | WHITE BLUE |
| 1 | 1 | 1 | 1 | 1 | 1 | 1 | 1 | 1 | 1 | 1 | 1 | 1 | 4 | GROMMET | SILICONE | BROWN |
| 1 | 1 | 1 | 1 | 1 | 1 | 1 | 1 | 1 | 1 | 1 | 1 | 1 | 3 | COVER | PBT-GF30 | BLACK |
| 1 | 1 | 1 | 1 | 1 | 1 | 1 | 1 | 1 | 1 | 1 | 1 | 1 | 2 | TPA | PBT-GF30 | RED |
| | | | 1 | | | | | 1 | | | | | 1 | PLUG WITH KEYING OPTION "D" | PA66-GF35 | GREY |
| | | | | 1 | | | | | 1 | | | | 1 | PLUG WITH KEYING OPTION "C" | PA66-GF35 | GREY |
| | | 1 | | | 1 | | | | | 1 | | | 1 | PLUG WITH KEYING OPTION "B" | PA66-GF35 | GREY |
| 1 | 1 | | | | | 1 | 1 | | | | 1 | 1 | 1 | PLUG WITH KEYING OPTION "A" | PA66-GF35 | GREY |
| QUANTITY | | | | | | | | | | | | | ITEM | DESCRIPTION | MATERIAL | COLOR/FINISH |

1. APPLICABLE TERMINAL PART NUMBERS (SOLD SEPARATELY):
   FOR TIN APPLICATIONS: 1393367 AND 1393366.
   FOR GOLD APPLICATIONS: 1393365 AND 1393364.
   FOR TERMINATION AND REELING OPTIONS
   SEE DRAWINGS 1393367, 1393366, 1393365, AND 1393364.

2. COMPATIBLE WIRE SIZES FOR MAT SEAL DESIGN 1.19 TO 2.06 O.D.
   (22-18 AWG, 0.35-0.75 mm2)

3. TPA AND CPA (OPTIONAL) ARE SHIPPED IN THEIR PRE-LOADED POSITIONS. ALL ASSEMBLIES ARE TO BE BULK PACKAGED.

4. TE ASSEMBLY PART NUMBER (X-XXXXXXX-X) AND TRACEABILITY CODE (YY = TWO DIGIT YEAR, WW = TWO DIGIT WEEK, D = ONE DIGIT DAY OF THE WEEK, S = ONE DIGIT SHIFT NUMBER) ARE PRINTED IN THIS LOCATION.

5. APPLICABLE HEADER INTERFACE DRAWING 1438198 IS AVAILABLE UPON REQUEST. A COPY OF THIS DRAWING CAN BE OBTAINED FROM THE TE PRODUCT MANAGER, VIA YOUR TE SALES REPRESENTITVE OR CUSTOMER SERVICE.

6. PART ASSEMBLY WEIGHT WITHOUT TERMINALS:
   WITHOUT CPA: 5.70 GRAMS
   WITH CPA: 6.10 GRAMS

7. THESE PART NUMBERS ARE NOT RELEASED FOR PRODUCTION. PLEASE CONTACT YOUR TE SALES REPRESENTITVE FOR AVAILABILITY AND PRICING.

THIS DRAWING IS A CONTROLLED DOCUMENT.

DIMENSIONS: mm

TOLERANCES UNLESS OTHERWISE SPECIFIED:
0 PLC ±
1 PLC ±0.3
2 PLC ±0.10
3 PLC ±
4 PLC ±
ANGLES ±1°

MATERIAL -
FINISH -

DWN M. FORISKA 16JAN2002
CHK M. FORISKA 19FEB2002
APVD A. SHUMAN 19FEB2002
PRODUCT SPEC -
APPLICATION SPEC -
WEIGHT SEE NOTE 8

TE Connectivity

NAME 1 X 4 SEALED FEMALE PLUG ASSEMBLY CUSTOMER SPEC. (EUROPE)

SIZE A1 | CAGE CODE 00779 | DRAWING NO C-9-1419167-0 | RESTRICTED TO -

CUSTOMER DRAWING | SCALE 4:1 | SHEET 1 OF 1 | REV E1

4805 (3/11)