SWITCH COMPONENTS

Mechanical Dimensions (mm)

Tolerances ±0.3 Unless Otherwise Specified

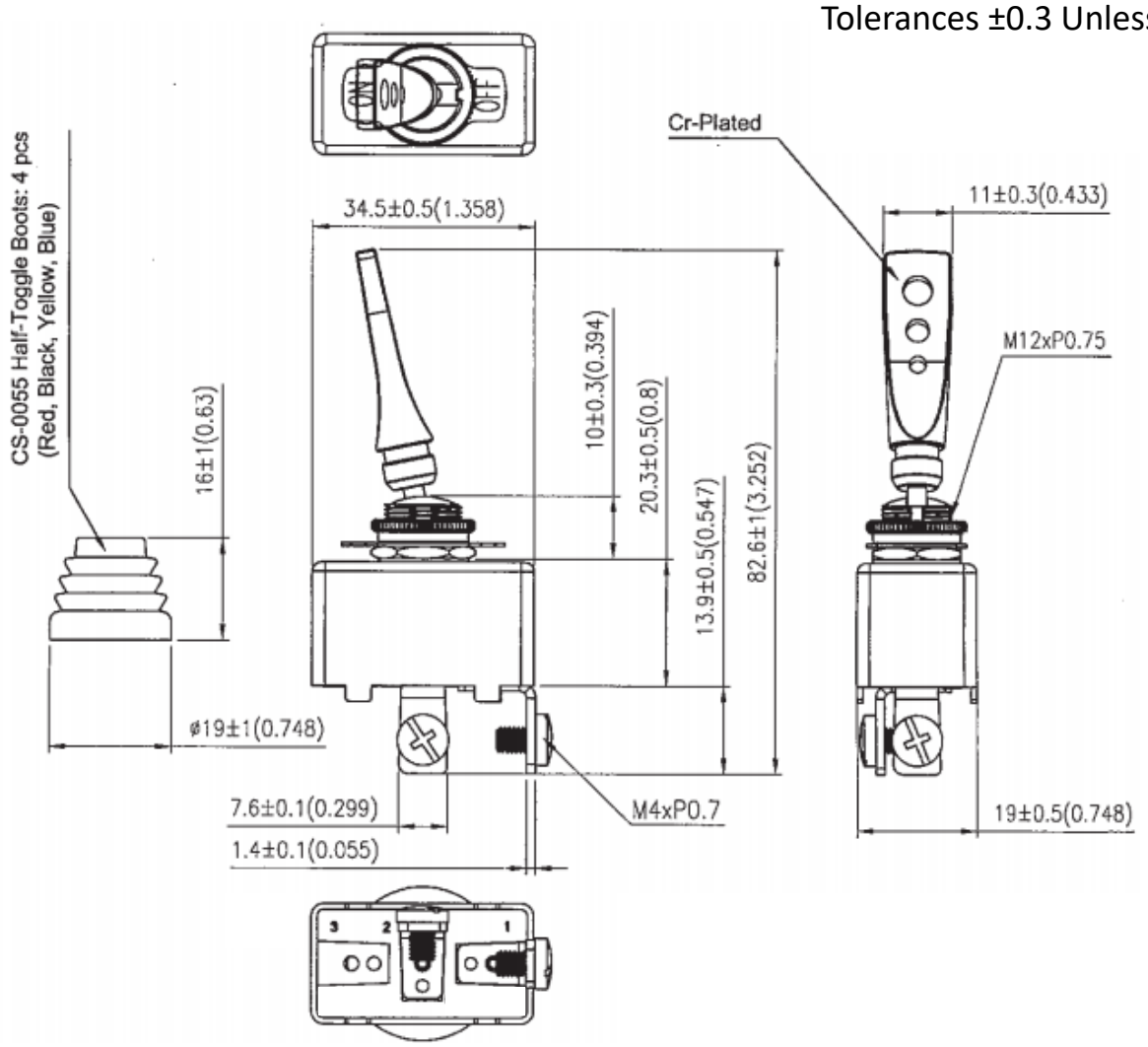

Mounting Hole

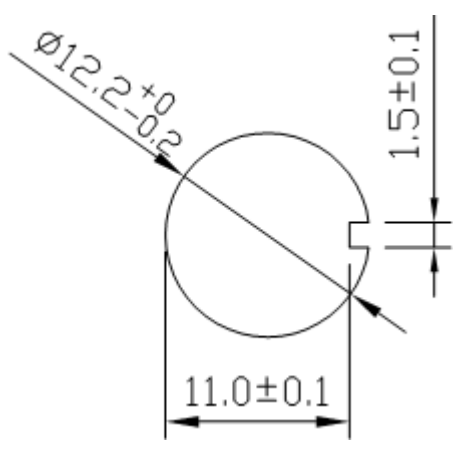

Thickness: 3mm max

Circuit Diagram

2P SPST OFF-ON

Electrical Specifications

Rating	50A 12V DC
Contact Resistance	50m ohm Max.
Insulation Resistance	DC 500V 100M ohm Min.
Dielectric Strength	AC 1500V 1 minute
Operation Temperature	-20°C~85°C

Material Specifications

2 HEX NUT ASSY
1 ON/OFF FACE PLATE ASSY
Extra 4 toggle boots