MODEL NO.	PACKAGING
147-0801-201	ONE PCS PER BAG

REV	ECO	DATE
001	ECO-17-0032	11/28/2017
002	ECO-18-0020	08/21/2018
003	ECO-19-0023	07/10/2019

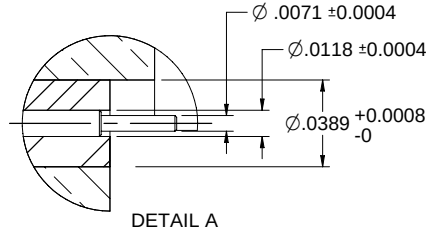

DETAIL A

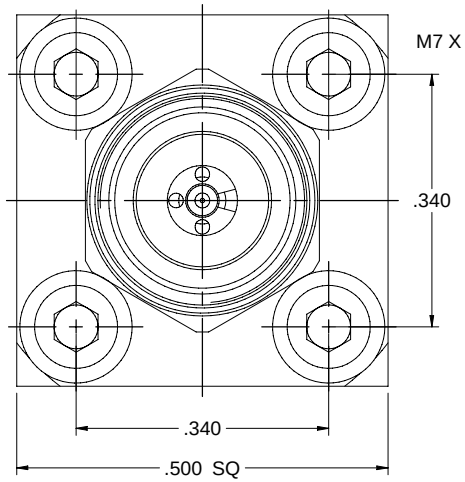

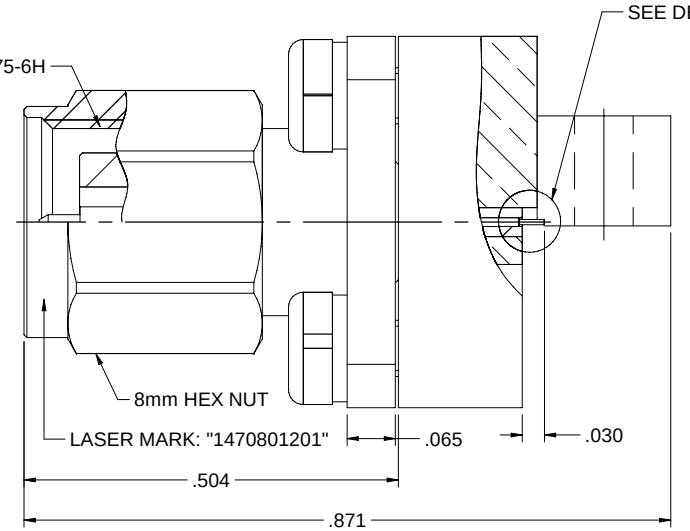

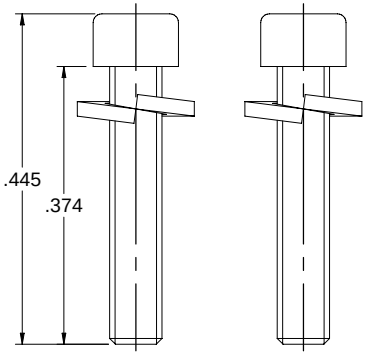

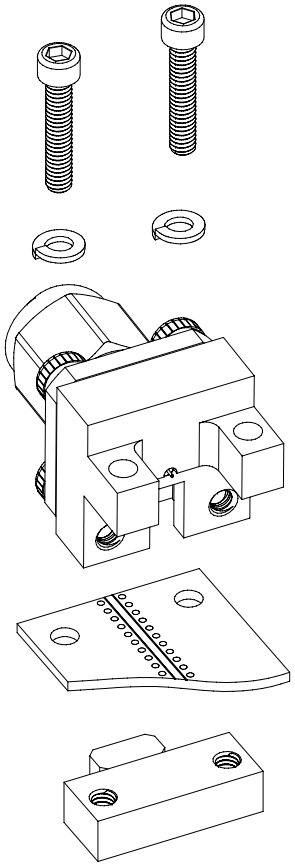

NOTES: UNLESS OTHERWISE SPECIFIED

1. MATERIAL & FINISH:
   1.1 MAIN BODY, NUT: PASSIVATED STAINLESS STEEL
   1.2 MOUNTING BODY: NICKEL PLATED BRASS
   1.3 CONTACT PIN : GOLD PLATED BERYLLIUM COPPER
   1.4 MAIN INSULATOR: ULTEM 1000 AMBER
   1.5 MOUNTING INSULATOR: PTFE WHITE
   1.6 BOLT & WASHER: STAINLESS STEEL

2. ELECTRICAL:
   2.1 IMPEDANCE: 50 OHMS
   2.2 FREQUENCY RANGE: DC-50 GHz
   2.3 VOLTAGE STANDING WAVE RATIO: 1.2 MAX
   2.4 CONTACT RESISTANCE:
      2.4.1 CENTER CONTACT: 6 MILLIOHM MAX
      2.4.2 OUTER CONTACT: 2.5 MILLIOHM MAX
   2.5 DIELECTRIC WITHSTANDING VOLTAGE: 500 VRMS MAX
   2.6 INSULATOR RESISTANCE: 5000 MEGOHM MIN

3. MECHANICAL:
   3.1 ENGAGEMENT/ DISENGAGEMENT FORCE: 0.23NM MAX
   3.2 COUPLING PROOF TORQUE: 1.65 NM MIN
   3.3 COUPLING NUT RETENTION: 267 N MIN
   3.4 CONTACT RETENTION: 20 N MIN
   3.5 DURABILITY: 500 CYCLES MIN
   3.6 BOARD THICKNESS: 0 - 0.11 INCH

4. ENVIRONMENT:
   4.1 THERMAL SHOCK: MIL-STD-202, METHOD 107, CONDITION B.
   4.2 OPERATING TEMPERATURE: -65 TO 165°C
   4.3 SHOCK: MIL-STD-202, METHOD 213, CONDITION I
   4.4 VIBRATION: MIL-STD-202, METHOD 204, CONDITION D
   4.5 MOISTURE RESISTANCE: MIL-STD-202, METHOD 106

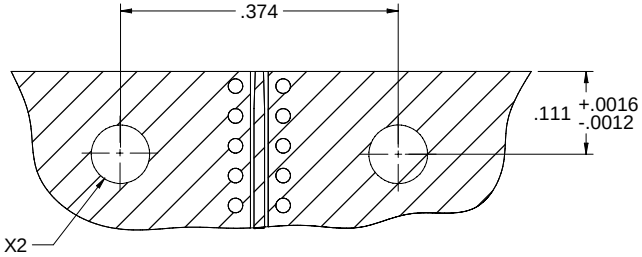

PCB LAYOUT

This PROPRIETARY Document is property of Cinch Connectivity Solutions. It is confidential and shall not be copied or issued with the clear intent of disclosure to third parties. Violation of this proprietary information will be prosecuted upon demand.

INTERPRET DRAWING IN ACCORDANCE WITH Y14.5M-1994 ASME

cinch	Model No. 147-0801-201	Johnson
RoHS2 2011/65/EU	Cage Code	Title: END LAUNCH PLUG,SCREW-ON TYPE,2.4mm
UNLESS OTHERWISE SPECIFIED UNITS INCH	3RD ANGLE PROJECTION	Drawing No. 147-0801-201 — Rev. 003
.XXX ±.02 .XXX ±.01 ANGLES ±5°	Drawn by: Betty.Yu	Size C — DO NOT SCALE DRAWING — Workmanship Std: NONE
	Date: 07/10/2019	Sheet 1 of 1