DRAWING MADE IN THIRD ANGLE PROJECTION

680442 ⇔ 680442

<US161B>DEPTPROJB>U.1618>U.FTB

PART NUMBER	REV	FIRST USED
680442-1	B	122500-1
680442-2	B	565435-5
680442-3	B	354500-1

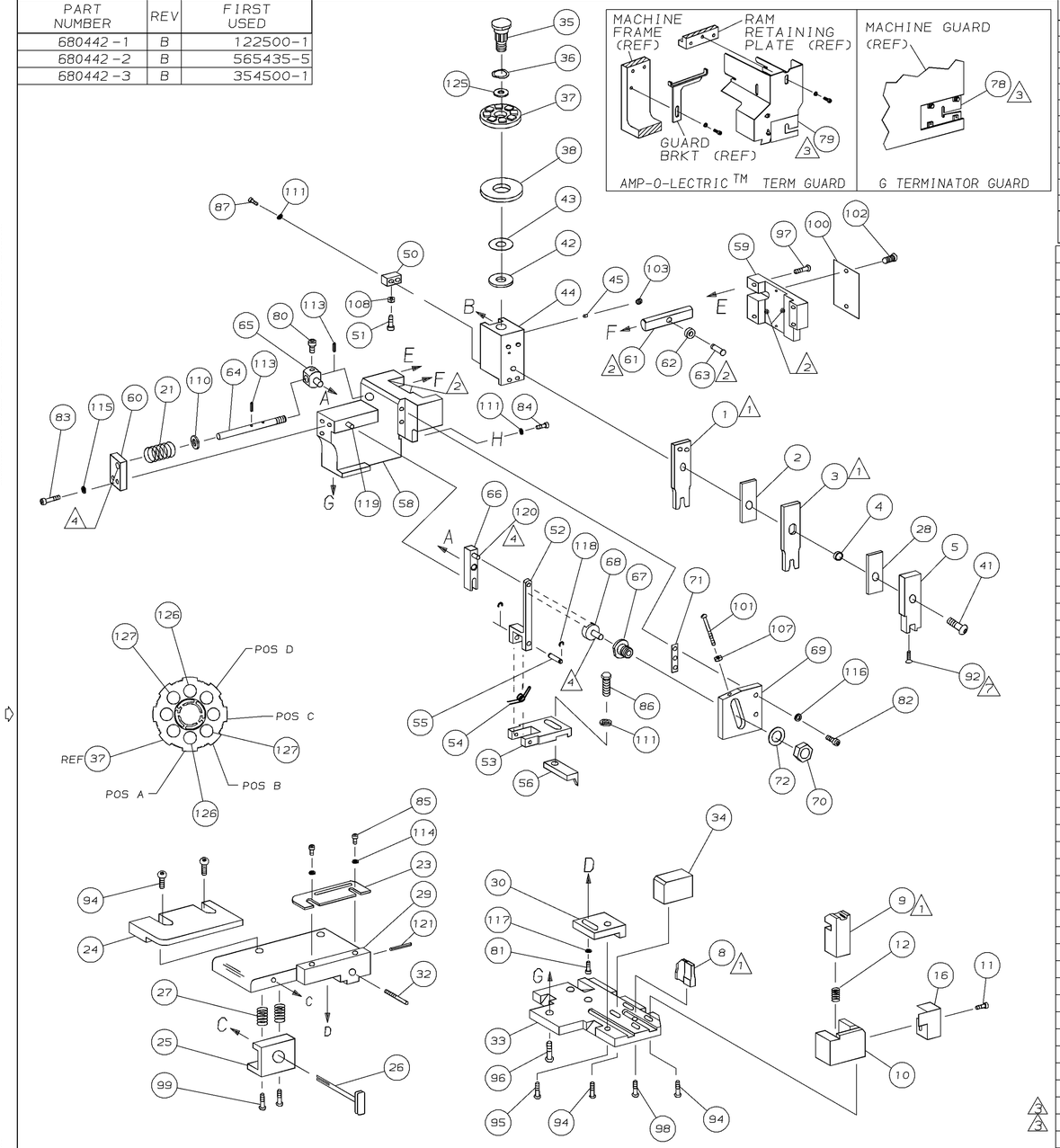

TERMINAL NAME: SWP TYPE TERMINAL & SEAL 8

SEAL	TERMINAL
286566	286562

CRIMPING DATA

PAD LTR	CRIMP HEIGHT	WIRE SIZE
A	.053 ±.002 [1.35 ±0.05mm]	14
B	NOT	USED
C	NOT	USED
D	NOT	USED

CRIMP	SIZE	TYPE	RANGE
WIRE	.090 [2.29mm]	F	14
INSUL	.160 [4.06mm]	O	.142-.150

WIRE STRIP LENGTH	TERM APPL SPEC	FEED	APPL INSTRUCTION	SET UP GAGE	LAYOUT
.216-.240	NONE	.512	408-8040	458637-1	L1908

-3	-2	-1	U/M	DWG SIZE	PART NO	DESCRIPTION	ITEM NO
							129
							128
							127
2	2	2	-	C	2-354779-4	PIN, WIRE DISC (.3110)A	126
1	1	1	-	A	986950-1	WASHER, FLAT PRECISION	125
1	1	1	-	A	217238-1	GENERAL INSTRUCTION PACKAGE	124
1	1	1	-	-	4088040	SF APPL INST 408-8040	123
							122
1	1	1	-	A	4-21028-0	PIN,SLT SPR(ø.093x.75)ST GDE PL	121
REF	REF	REF	-	A	1-21030-1	PIN,DOWEL(ø.187x.50)LEVER	120
REF	REF	REF	-	A	1-21030-6	PIN,DOWEL(ø.187x1.25)HOUSING	119
REF	REF	REF	-	A	21045-3	RING,RET "C"(ø.187)FD FING PIN	118
1	1	1	-	A	21024-5	WASHER, LOCK(#10)ADJ BLOCK	117
REF	REF	REF	-	A	21024-5	WASHER,LOCK(#10)ADJ PLATE	116
REF	REF	REF	-	A	21024-5	WASHER,LOCK(#10)FEED GDE ROD	115
2	2	2	-	A	21024-2	WASHER,LOCK(#4)FRONT STP GUIDE	114
REF	REF	REF	-	A	5-21028-1	PIN,SLT SPR(ø.125x.50)ADJ ROD	113
							112
4	4	4	-	A	21024-4	WASHER,LOCK(#8)STRIPPER	111
REF	REF	REF	-	A	21899-4	WASHER,FLAT(ø5/16)SCREW ADJ	110
							109
1	1	1	-	A	21018-5	NUT,HEX(NO.6)HOLDDOWN	108
REF	REF	REF	-	A	21018-5	NUT,HEX(6-32)FEED ADJ	107
							106
							105
1	1	-	-	A	992031-1	PIN, CLEVIS	104
1	1	1	-	A	21009-2	SCR,SKT SET(1/4-20x.25 LW)RAM	103
2	2	2	-	A	21017-2	SCR,DRIVE(#2x.19)ID PLATE	102
REF	REF	REF	-	A	6-23715-5	SCR,PAN HD(6-32x1.50)FEED ADJ	101
1	1	1	-	B	461264-1	PLATE, IDENTIFICATION	100
2	2	2	-	A	3-21002-0	SCR,BHC(10-32x.88)DRAG	99
1	1	1	-	A	22733-8	SCR,BHC(8-32x.38 LW)ANVIL	98
REF	REF	REF	-	A	2-21002-9	SCR,BHC(10-32x.75)CAP	97
REF	REF	REF	-	A	2-22733-8	SCR,BHC(1/4-20x.62)HOUSING	96
REF	REF	REF	-	A	2-21002-7	SCR,BHC(10-32x.50)SG ADJ BLOCK	95
6	6	6	-	A	2-21002-2	SCR,BHC(8-32x.50)TERM H DWN	94
							93
1	1	1	-	A	1-21003-9	SCR,FHC(6-32x.38)DEP	92
1	1	1	-	A	1-21002-7	SCR,BHC(6-32x.38)CAM	91
							90
1	1	-	-	A	7-21000-9	SCR,SHC(4-40x.19)STRIPPER	89
							88
2	2	2	-	A	2-21000-8	SCR,SHC(8-32x.62)DEP-HOLD	87
1	1	1	-	A	2-22603-0	SCR,HEX HD(8-32x.31)FEED FINGER	86
2	2	2	-	A	1-21000-3	SCR,SHC(4-40x.25)F ST GUIDE	85
1	1	1	-	A	2-21000-7	SCR,SHC(8-32x.50)STRIPPER	84
REF	REF	REF	-	A	3-21000-7	SCR,SHC(10-32x.75)FEED ROD GD	83
REF	REF	REF	-	A	3-21000-6	SCR,SHC(10-32x.62)FD ADJ BLK	82
1	1	1	-	A	3-21000-4	SCR,SHC(10-32x.38)SG ADJ BL	81
REF	REF	REF	-	A	3-21000-4	SCR,SHC(10-32x.38)PIVOT BLK	80
-	REF	-	-	B	455749-1	GUARD, WINDOW	79
REF	-	-	-	B	679532-1	INSERT, GUARD	78
							77
							76
							75
							74
							73
REF	REF	REF	-	A	458109-1	WASHER, SPECIAL	72
REF	REF	REF	-	A	690517-1	SPACER	71
-3	-2	-1	U/M	DWG SIZE	PART NO	DESCRIPTION	ITEM NO

QTY REQD PER ASSY — PARTS LIST

-1	LEADMAKER				MECH POST FEED			
-2	BENCH MODEL K				MECH PRE FEED			
-3	BENCH MODEL G				MECH PRE FEED			
REF	REF	REF	-	B	22594-8	NUT,HEX(1/2-20)	70	
REF	REF	REF	-	B	240628-1	PLATE, ADJUSTMENT	69	
REF	REF	REF	-	B	240626-1	SHAFT, PIVOT	68	
REF	REF	REF	-	B	240633-1	BUSHING	67	
REF	REF	REF	-	A	455680-1	LEVER, INTERMEDIATE	66	
REF	REF	REF	-	B	240629-1	BLOCK, PIVOT	65	D
REF	REF	REF	-	A	240632-2	SCREW, ADJ FEED ROD	64	
REF	REF	REF	-	B	240659-3	PIN, CAM ROLLER	63	
REF	REF	REF	-	B	240658-1	ROLLER, CAM	62	
REF	REF	REF	-	B	454398-2	ROD, FEED	61	
REF	REF	REF	-	A	454178-1	GUIDE, FEED ROD	60	
REF	REF	REF	-	C	454220-1	CAP, RAM	59	
REF	REF	REF	-	D	454485-1	HOUSING	58	
							57	
1	1	1	-	B	690542-2	PAWL, FEED	56	
REF	REF	REF	-	B	240624-1	PIN, FEED FINGER	55	
REF	REF	REF	-	B	691499-1	SPRING, FEED FINGER	54	
REF	REF	REF	-	B	690541-1	HOLDER, FEED FINGER	53	
REF	REF	REF	-	A	455679-1	LEVER, TERMINAL FEED ARM	52	
1	1	1	-	A	811242-2	BUMPER, HOLDDOWN	51	
1	1	1	-	A	690753-1	SPACER, TONKER	50	
1	-	-	-	B	690602-6	CAM, PRE-FEED 1 5/8 ST	49	
-	1	-	-	B	690602-5	CAM, PRE-FEED 1 1/8 ST	48	
-	-	1	-	B	690501-4	CAM, POST-FEED 1 5/8 ST	47	
1	1	1	-	B	459456-1	APPLICATOR, BASIC (SUBASSY)	46	
1	1	1	-	A	690191-1	PLUG, NYLON	45	
1	1	1	-	C	455673-1	RAM	44	
1	1	1	-	A	690125-1	WASHER, LAMINATED	43	C
1	1	1	-	A	690124-1	WASHER, RAM	42	
1	1	1	-	A	690686-1	BOLT, CRIMPER(5/16x1.00)	41	
							40	
							39	
1	1	1	-	A	690142-3	SPACER, INSULATION DISC	38	
1	1	1	-	D	354777-1	WIRE DISC, PLASTIC	37	
1	1	1	-	A	22480-5	WASHER, SPRING	36	
1	1	1	-	B	690212-1	POST, RAM	35	
1	1	1	-	B	690786-1	SUPPORT, TERMINAL	34	
REF	REF	REF	-	D	455675-1	PLATE, BASE	33	
1	1	1	-	A	690432-3	SCREW, ADJUSTMENT	32	
							31	
REF	REF	REF	-	B	455689-1	BLOCK, STRIP GUIDE ADJ	30	
1	1	1	-	C	455671-1	PLATE, STRIP GUIDE	29	
1	1	1	-	C	1-455888-7	SPACER, FRONT SHEAR DEP	28	
2	2	2	-	A	1-22284-0	SPRING, DRAG	27	
1	1	1	-	B	690546-1	LEVER, DRAG RELEASE	26	
1	1	1	-	B	240792-1	DRAG, TERMINAL	25	
1	1	1	-	D	6-690504-8	GUIDE, STRIP (REAR)	24	
1	1	1	-	A	690438-1	GUIDE, STRIP (FRONT)	23	
-	-	1	-	B	690472-2	STRIPPER	22	
REF	REF	REF	-	A	4-22284-9	SPRING, FEED RETURN	21	B
1	1	-	-	A	679218-1	STRIPPER WIRE STOP ASSY	20	
1	1	-	-	B	458949-1	STRIPPER	19	
							18	
							17	
1	1	1	-	B	318563-1	GUARD, CHIP, FRONT	16	
							15	
							14	
							13	
1	1	1	-	A	5-22280-0	SPRING, SHEAR	12	
1	1	1	-	B	690461-2	STOP, SHEAR	11	
1	1	1	-	C	1-690459-0	HOLDER, SHEAR (FRONT)	10	
1	1	1	-	C	318707-1	SHEAR, FLOAT (FRONT)	9	
1	1	1	-	C	662187-9	ANVIL	8	
1	1	1	-	C	2-240641-4	SPACER, DEPRESSOR	7	
							6	
1	1	1	-	C	318701-1	DEPRESSOR, SHEAR (FRONT)	5	
1	1	1	-	B	3-238011-3	SPACER BLOCK,CRIMPER	4	
1	1	1	-	C	904741-5	CRIMPER,INSULATION	3	
1	1	1	-	C	1-455888-4	SPACER,CRIMPER	2	
1	1	1	-	C	456406-2	CRIMPER, WIRE	1	
-3	-2	-1	U/M	DWG SIZE	PART NO	DESCRIPTION	ITEM NO	

QTY REQD PER ASSY — PARTS LIST

680442

REVISION OF EACH ASSY NO (WHEN BLANK, USE DWG REVISION)

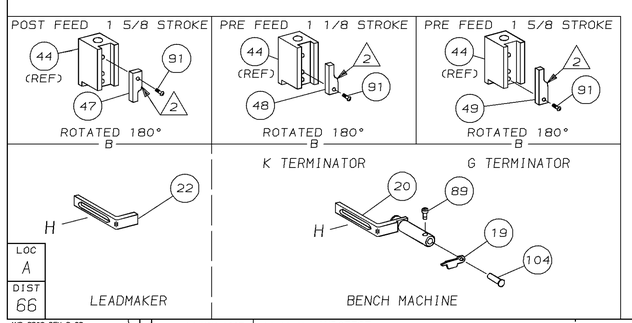

1. RECOMMENDED SPARE PARTS.
2. GREASE LIGHTLY.
3. GUARD MUST BE IN PLACE WHEN OPERATING APPLICATOR IN A BENCH MACHINE.
4. LUBRICATE DAILY USING NO. 20 MACHINE OIL.
5. ITEMS WITH QTY OF REF SPECIFIED (EXCEPT ITEMS 78 AND 79) ARE USED ON ITEM 46.

7. APPLY TORQ-SEAL IN ALLEN SOCKET TO FILL HOLE AFTER FLAT HD HAS BEEN ADJUSTED TO CORRECT HEIGHT AT QUALIFICATION. APPLY #1-23419-5 LOC-TITE TO THREADS.

8. THIS APPLICATOR APPLIES TERMINAL WITH SEAL.

P	F	LTR	REVISION RECORD	APP	DATE
		B	0150-8071-97	TB	10-97
		A	REVISED	CE	9-97

DIMENSIONS IN INCHES.
DO NOT SCALE PRINT.
TOLERANCES UNLESS OTHERWISE SPECIFIED:
2 PLC DEC ±-
3 PLC DEC ±-
4 PLC DEC ±-
ANGLES ± -
SURF TEXTURE: √
REMOVE BURRS, BREAK SHARP EDGES R.015 MAX

MATL -	HT TR -	FIN -	
DR P.MCCARTY 4-8-97	APP 4-8-97 J.HIRNEISEN	AMP Incorporated Harrisburg, PA 17105-3608	
CHK 4-8-97 C.ERISMAN	REL 11/4/97 B. MORGAN		
NAME SIDE FEED HDM APPLICATOR		MACHINE REF MINI APPL	
SCALE -	D DWG NO 680442	SHEET 1 OF 1	REV B

THIS DRAWING IS A CONTROLLED DOCUMENT FOR AMP INCORPORATED. IT IS SUBJECT TO CHANGE AND THE CONTROLLING ENGINEERING ORGANIZATION SHOULD BE CONTACTED FOR THE LATEST REVISION.

THIS INFORMATION IS CONFIDENTIAL AND IS DISCLOSED TO YOU ON CONDITION THAT NO FURTHER DISCLOSURE IS MADE BY YOU TO OTHER THAN AMP PERSONNEL WITHOUT WRITTEN AUTHORIZATION FROM AMP INCORPORATED, HARRISBURG, PA.