NOTES:

1. MATERIALS AND FINISHES:
   BODY, RETAINING RING, WASHER,
   FERRULE AND BAYONET SLEEVE - BRASS, NICKEL PLATING
   OUTER CONTACT - BeCu, NICKEL PLATING
   CONTACT - PHOSPHOR BRONZE, GOLD PLATING
   INSULATORS - PTFE, NATURAL
   SPRING - STAINLESS STEEL, PASSIVATED
   GASKET - FLUOROSILICONE, BLACK

2. ELECTRICAL:
   A. IMPEDANCE: 75 OHM
   B. FREQUENCY RANGE: DC - 18 GHz
   C. RETURN LOSS (VSWR): 20 dB MIN (1.22) @ DC - 6 GHz
      15 dB MIN (1.43) @ 6 - 12 GHz
   D. DIELECTRIC WITHSTANDING VOLTAGE: 1000 VRMS, MIN.
   E. INSULATION RESISTANCE: 10,000 MΩ MIN

3. MECHANICAL:
   A. DURABILITY: 500 CYCLES MIN.
   B. TEMPERATURE RANGE: -30° C TO +85° C

4. ENVIRONMENTAL:
   A. THERMAL SHOCK PER MIL-STD-202 METHOD 107
      TEST CONDITION B (EXCEPT HIGH TEMP @200°C)
   B. VIBRATION: MIL-STD-202 METHOD 204 TEST CONDITION B
   C. SHOCK: MIL-STD-202 METHOD 213 TEST CONDITION B
   D. CORROSION: MIL-STD-202 METHOD 101
      TEST CONDITION B 5% SALT SOLUTION

5. PACKAGING:
   A. QUANTITY: SINGLE PACK
   B. MARKING: BAG TO BE MARKED:
      "AMPHENOL RF, 34-1130-12G DATE CODE
      U.S. PATENT NO. 7,553,177"

6. HIGH DENSITY INSTALLATION/REMOVAL TOOL: 227-T2000.

7. CABLE ASSEMBLY INSTRUCTIONS:
   A. TRIM CABLE AS SHOWN.
   B. CRIMP CONTACT TO CABLE CENTER CONDUCTOR
      WITH .042" SQUARE DIE
   C. CRIMP FERRULE WITH .278" HEX

8 SHOWS CABLE ENTRY DIMENSIONS.

THIRD ANGLE PROJ.

REVISIONS				
REV	DESCRIPTION	DATE	ECO	APPR
A	RELEASE TO MANUFACTURING	20-Nov-18	09704	CJV

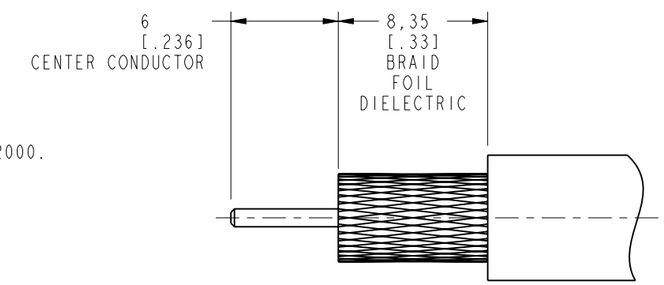

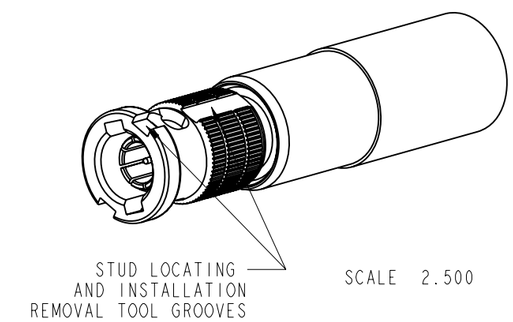

RECOMMENDED CABLE STRIPPING DIMENSIONS

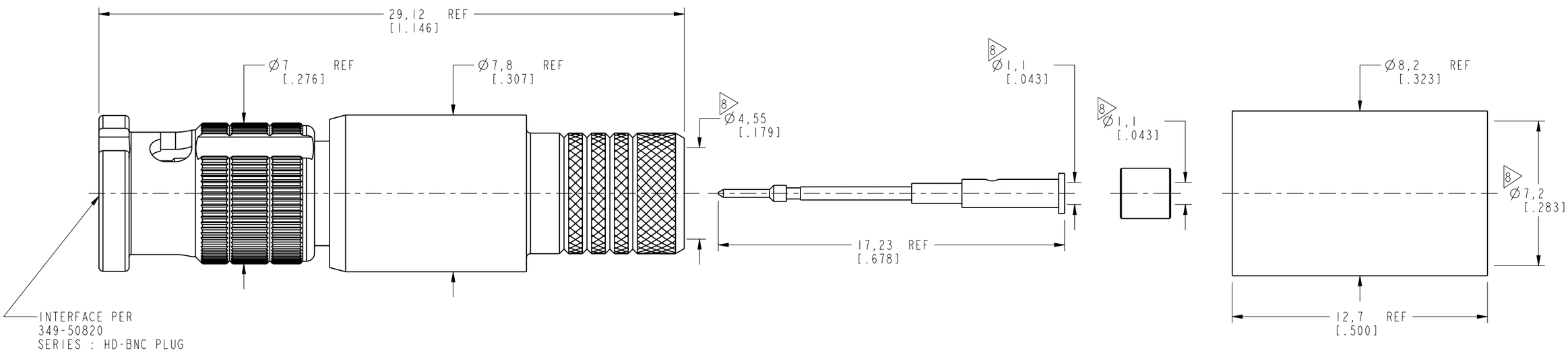

CUSTOMER OUTLINE DRAWING

ALL OTHER SHEETS ARE FOR INTERNAL USE ONLY

PROTECTED UNDER U.S. PATENT # 7,553,177

UNLESS OTHERWISE SPECIFIED, DIMENSIONS ARE IN METRIC AND TOLERANCES ARE:

<0.5mm	0.5 - 6mm	6 - 30mm	30 - 120mm	ANGLES
± 0.05mm	±0.1mm	±0.2mm	± 0.3mm	±1°

NOTICE - These drawings, specifications, or other data (1) are, and remain the property of Amphenol corp. (2) must be returned upon request; and (3) are confidential and not to be disclosed to any person other than those to whom they are given by Amphenol Corp. the furnishing of these drawings, specifications, or other data by Amphenol Corp., or to any other person to anyone for any purpose is not to be regarded by implication or otherwise in any manner licensing, granting rights to permitting such holder or any other person to manufacture, use or sell any product, process or design, patented or otherwise, that may in any way be related to or disclosed by said drawings, specifications, or other data.

MATERIAL SEE NOTES	DRAWN W.ZENG	DATE 22-Nov-18
	ENGINEER S.DUAN	DATE 23-Nov-18
REFERENCE 8048 AND 34-1121-12G CONFIGURATION LEVEL: In Work	APPROVED S.HSIEH	DATE 23-Nov-18
FINISH	CAD FILE	

TITLE
HD-BNC STR PLUG
(BELDEN 4694P CABLE)

SCALE: 5.0:1.0 | SHEET 2 OF 2

DWG SIZE: B | REV: A

Amphenol RF
www.amphenolrf.com

DRAWING NO. 34-1130-12G
ITEM NO. 34-1130-12G
PART NO. 34-1130-12G