NOTES:
1. MATERIALS AND FINISHES:
   BODY - BeCu, GOLD PLATING, .000030 [0.8] THICK OVER NICKEL
   CONTACT - BeCu, GOLD PLATING, .000030 [0.8] THICK OVER NICKEL
   INSULATOR - PTFE
2. ELECTRICAL:
   A. IMPEDANCE: 50 OHM
   B. FREQUENCY RANGE: DC - 26.5 GHz
   C. VSWR(RETURN LOSS): 1.2 (20.8 dB), MAX. DC-10GHz
      1.4 (15.6 dB), MAX. 10-18GHz
      1.5 (14 dB), MAX. 18-26.5GHz
   D. DIELECTRIC WITHSTANDING VOLTAGE: 500 VRMS, MIN.
3. PHYSICAL:
   A. DURABILTIY: 100 CYCLES MIN.
   B. ENGAGEMENT FORCE: 15 LB [67 N] MAX
   C. DISINGAGEMENT FORCE: 2 LB [9 N] MIN
   E. TEMERATURE RANGE: -65° C TO 165° C
4. PACKAGING:
   A. QUANTITY: SINGLE PACK
   B. MARKING:
      RNT 9003/05
      AMPHENOL
      SMP-FSBA-145
      DATE CODE
      QTY

THIRD ANGLE PROJ.

REVISIONS

| REV | DESCRIPTION | DATE | ECO | APPR |
|---|---|---|---|---|
| A | RELEASE TO MFG | 11/22/05 | 45809 | MAH |
| B | SYNCH THE DRAWING\RD-DM12121701J7 | 27-Dec-12 | 49364 | SH |

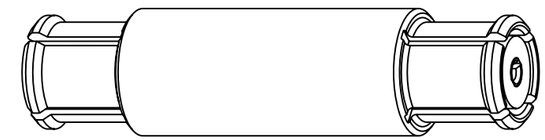

SCALE 6.000

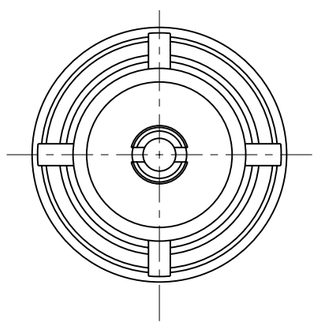

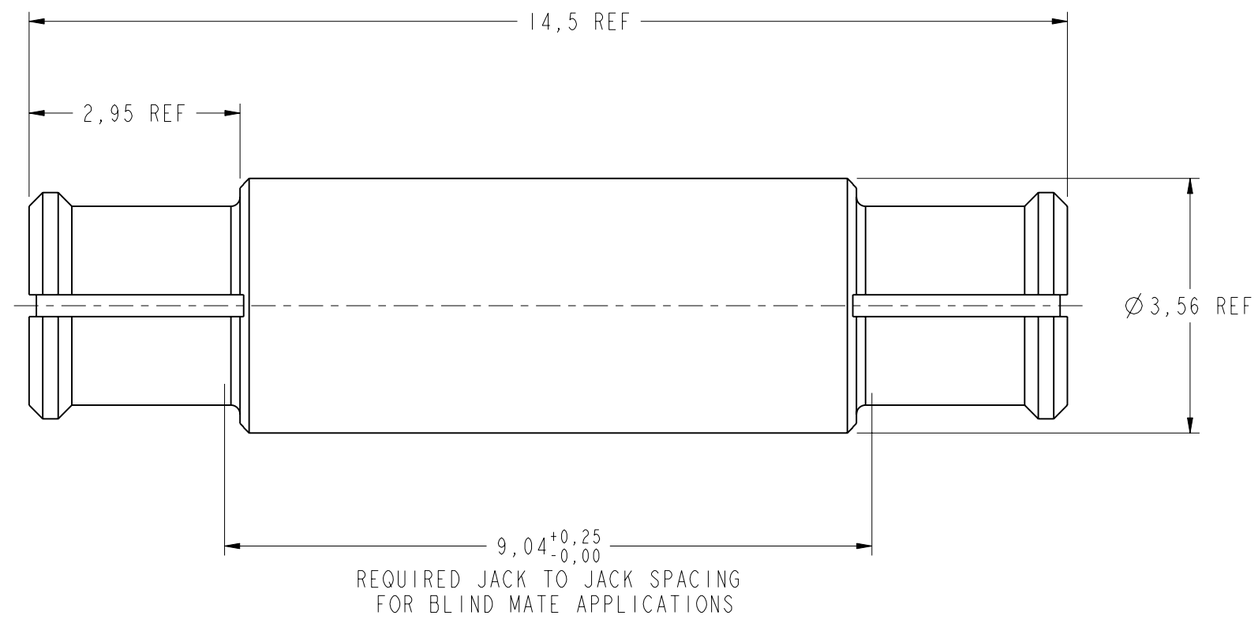


# CUSTOMER OUTLINE DRAWING

ALL OTHER SHEETS ARE FOR INTERNAL USE ONLY

UNLESS OTHERWISE SPECIFIED, DIMENSIONS ARE IN METRIC AND TOLERANCES ARE:

| <0.5mm | 0.5 - 6mm | 6 - 30mm | 30 - 120mm | ANGLES |
|---|---|---|---|---|
| ± 0.05mm | ±0.1mm | ±0.2mm | ± 0.3mm | ±1° |

NOTICE - These drawings, specifications, or other data (1) are, and remain the property of Amphenol corp. (2) must be returned upon requiest; and (3) arre confidential and not to be disclosed to any person other than those to whom they are given by Amphenol Corp. the funishing of these drawings, specifications, or other data by Amphenol Corp., or to any other person to anyone for any purpose is not to be regarded by implicatioin or otherwise in any manner licensing, granting rights to permitting such holder or any other sperson to manufacture, use or sell any product, process or design, patented or otherwsie, that may in any way be related to or disclosed by said drawings, specifications, or other data.

MATERIAL
-

REFERENCE
EAR # 1919 AND 615X-1808-100

CONFIGURATION LEVEL: □□□

FINISH

| | |
|---|---|
| DRAWN J.SHAO | DATE 27-Dec-12 |
| ENGINEER OWEN BARTHELMES | DATE 13-May-02 |
| APPROVED S.HSIEH | DATE 27-Dec-12 |
| CAD FILE I:/SMP/SMP-FSBA-145 | |

TITLE
ASSEMBLY
SMP,F-F

SCALE: 12.0:1.0 SHEET 2 OF 2

DWG SIZE B REV B

Amphenol RF
Danbury CT USA, Tainan, Taiwan, Shenzhen, China
www.amphenolrf.com

| | |
|---|---|
| DRAWING NO. | SMP-FSBA-145 |
| ITEM NO. | SMP-FSBA-145 |
| PART NO. | SMP-FSBA-145 |