MALLORY Mallory Sonalert Products Inc.	Part # AST1027MW-03TRQ
Sales Outline Drawing	Revision **D**

May not be suitable for all Medical and Aerospace applications.
Contact Mallory Sonalert to discuss your application.

Oscillation Frequency (Hz)	2700
Operating Voltage (Vp-p)	2.5 ~ 4.5
Rated Voltage (Vp-p)	3
Current Consumption Max. (mA)	80 at Rated Voltage
Sound Pressure Level (dB/min)	87 at 10cm at Rated Voltage
Coil Resistance (Ω)	18 ± 3
Operating Temperature (°C)	-20 ~ +85
Storage Temperature (°C)	-30 ~ +85
Type of Connection Terminal	SMD
Housing	LCP plastic resin (Color : Black)
Weight (Grams)	0.8
Condition by reflow soldering (°C)	250 ± 5 / within 10 sec
Condition by hand soldering (°C)	350 ± 20 / within 5 sec
Options	For other options contact factory

Dimensions: (units: mm) **RoHS Compliant**

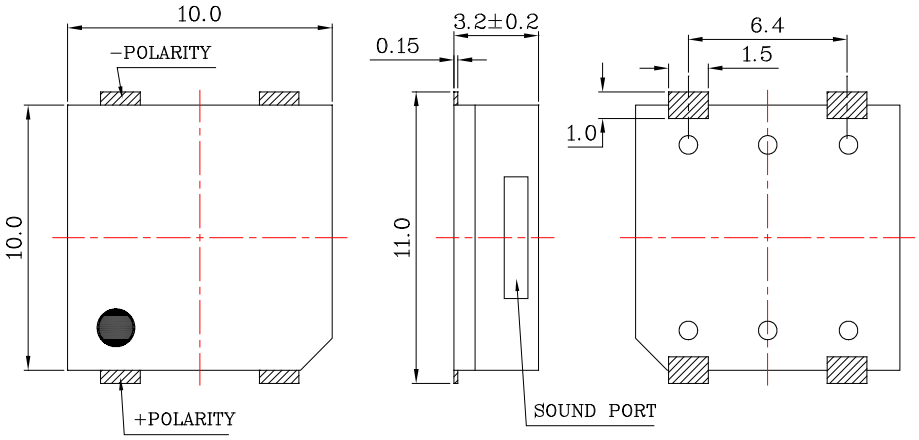

Packaging:
Parts are supplied on tape-and-reel, 800 pcs per reel.
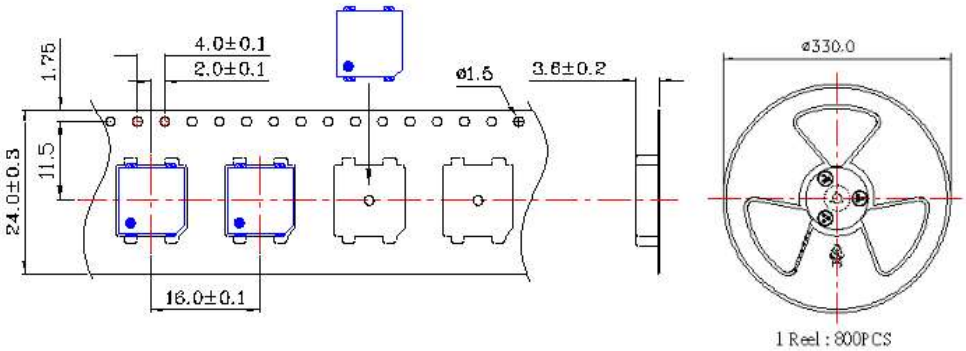
Units do not come with wash label and are not appropriate for aqueous wash.