THIS DRAWING IS UNPUBLISHED. RELEASED FOR PUBLICATION -,- .
© COPYRIGHT - By - ALL RIGHTS RESERVED.

LOC	DIST
GP	00

REVISIONS

P	LTR	DESCRIPTION	DATE	DWN	APVD
	A2	REVISED PER ECO-11-004835	11MAR11	RK	HMR

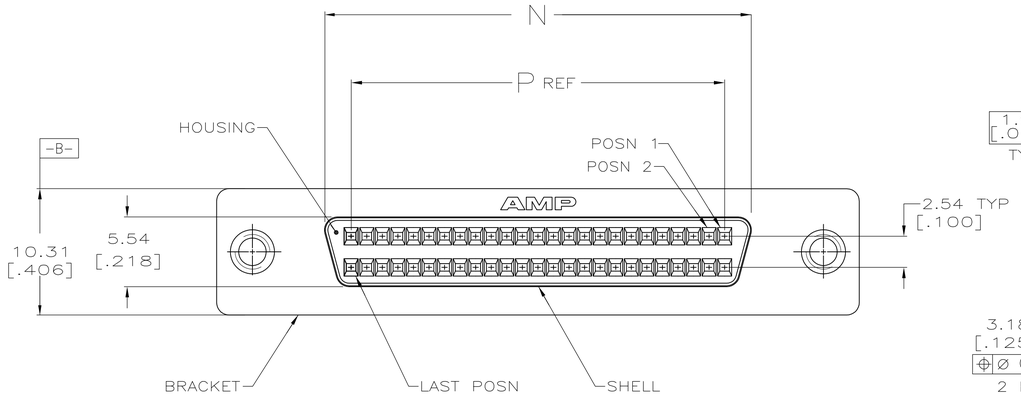

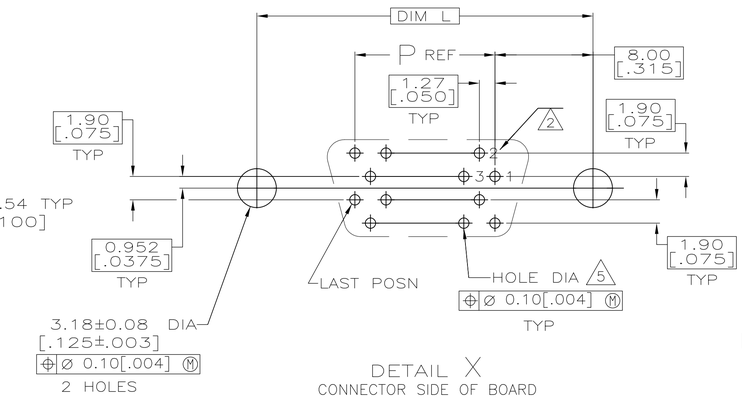

DETAIL X
CONNECTOR SIDE OF BOARD

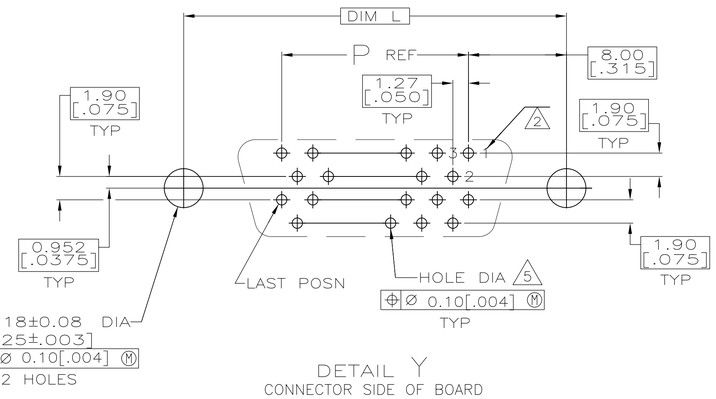

DETAIL Y
CONNECTOR SIDE OF BOARD

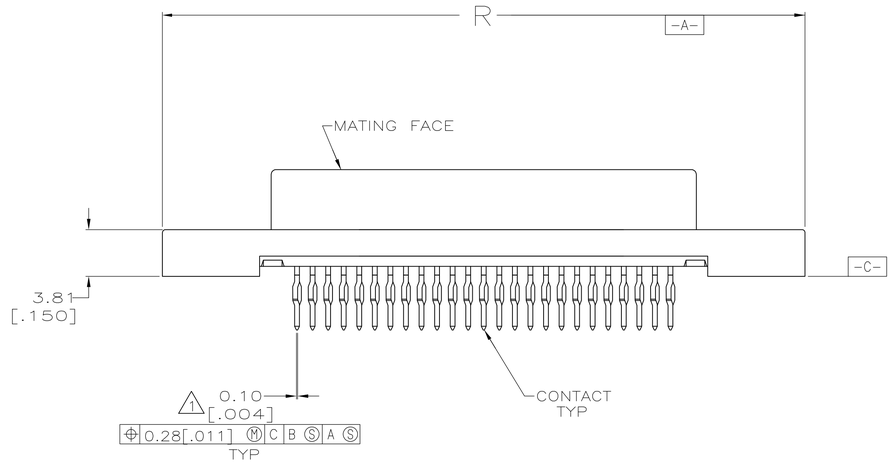

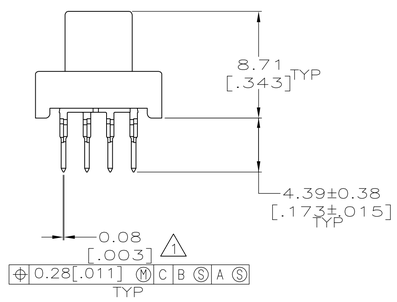

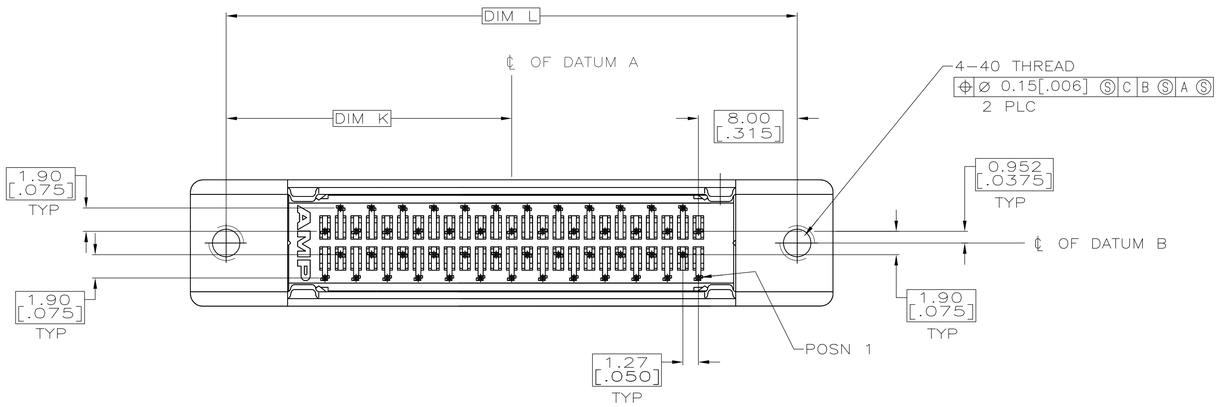

1. POSITION TOLERANCE APPLIES AT CONTACT TIP.
2. POSITION NUMBERS SHOWN FOR REFERENCE ONLY.
3. MATERIAL:
   HOUSING – POLYPHTHALAMIDE, BLACK, UL 94-VO RATED.
   SHELL – CARBON STEEL PER ASTM A109.
   CONTACTS – PHOSPHOR BRONZE PER QQ-B-750.
   BRACKET – ZINC.
4. FINISH:
   SHELL – 5.08μm [.000200] MIN NICKEL OVER 1.27μm [.000050] MIN COPPER.
   BRACKET – 3.81μm [.000150] MIN NICKEL OVER 5.08μm [.000200] MIN COPPER.
   CONTACTS – EITHER 0.76μm [.000030] MIN GOLD PLATE OR GOLD FLASH OVER PALLADIUM NICKEL, 0.76μm [.000030] MIN TOTAL, FOR A LENGTH OF 0.64 [.025] MIN, 0.13 [.005] MAX FROM MATING END, 1.27μm [.000050] MIN TIN ON OPPOSITE END FOR A LENGTH OF 4.78 [.188] MIN, ALL OVER 1.27μm [.000050] MIN NICKEL UNDERPLATE.
5. PC BOARD HOLE RECOMMENDATIONS:
   A. HOLES SHOULD BE DRILLED WITH A 0.701 [.0276] DRILL.
   B. PC BOARD PLATING TO BE 7.62μm[.000300] MIN TIN OVER 0.025-0.038 [.0010-.0015] COPPER.
   C. RECOMMENDED HOLE SIZE AFTER TIN PLATING IS 0.56-0.66 [.022-.026].
6. OBSOLETE PARTS: OBSOLETE CIS STREAMLINING PER D.RENAUD/D.SINISI

6	OBSOLETE	PER DETAIL X	96.90 [3.815]	74.93 [2.950]	79.15 [3.116]	90.93 [3.580]	45.47 [1.790]	120	~~1-5786555-0~~
		PER DETAIL X	84.20 [3.315]	62.23 [2.450]	66.45 [2.616]	78.23 [3.080]	39.12 [1.540]	100	5786555-9
		PER DETAIL X	63.88 [2.515]	41.91 [1.650]	46.13 [1.816]	57.91 [2.280]	28.96 [1.140]	68	5786555-7
		PER DETAIL Y	52.45 [2.065]	30.48 [1.200]	34.70 [1.366]	46.48 [1.830]	23.24 [.915]	50	5786555-5
6	OBSOLETE	PER DETAIL X	33.40 [1.315]	11.43 [.450]	15.65 [.616]	27.43 [1.080]	13.72 [.540]	20	~~5786555-1~~
		RECOMMENDED PCB MTG DIMENSIONS	R	P	N	L	K	NO OF POSN	PART NO

THIS DRAWING IS A CONTROLLED DOCUMENT.

DIMENSIONS: mm [INCHES]

TOLERANCES UNLESS OTHERWISE SPECIFIED:
0 PLC ± –
1 PLC ± –
2 PLC ± 0.13 [.005]
3 PLC ± –
4 PLC ± –
ANGLES ± –

MATERIAL 3 FINISH 4

DWN B. MCMASTER 25MAY04
CHK S. SHUEY 25MAY04
APVD M. WALMSLEY 25MAY04
PRODUCT SPEC 108-1228
APPLICATION SPEC 114-40029
WEIGHT –

TE Connectivity

NAME RECEPTACLE ASSEMBLY, SHIELDED, VERTICAL, FLAT TOP, ACTION PIN FOR .062 TO .093 THICK BD,

SIZE A1 | CAGE CODE 00779 | DRAWING NO C-5786555 | RESTRICTED TO –

CUSTOMER DRAWING | SCALE 4:1 | SHEET 1 OF 1 | REV A2