Technical Data Sheet		Rosenberger
7-16	Adaptor Jack – Jack	**60K501-K50N1**

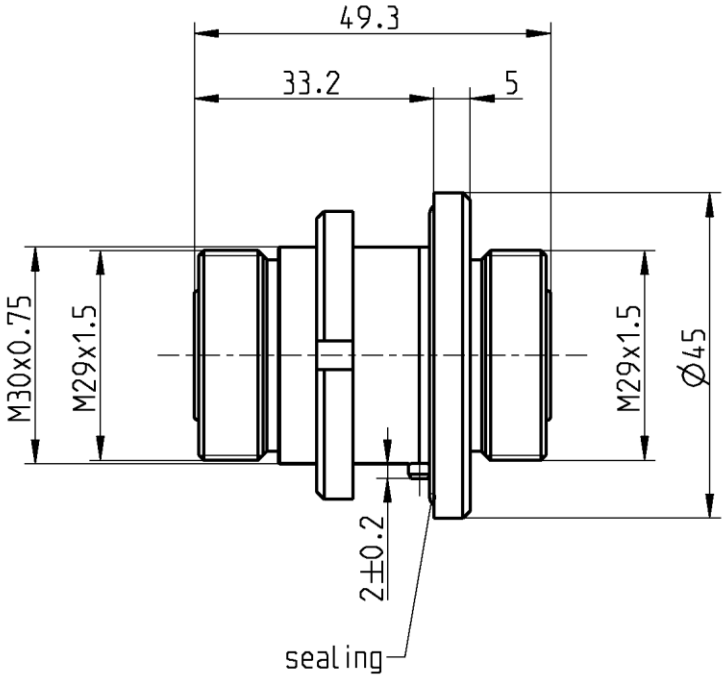

All dimensions are in mm; tolerances according to ISO 2768 m-H

Interface

According to	IEC 61169-4, EN 122190, DIN 47223

Documents

Panel piercing	B 84

Material and plating

Connector parts	**Material**	**Plating**
Center contact	CuBe	Silver, 3-6 µm
Outer contact	Brass	Flash white bronze over silver(e.g. Optargen®)
Body	Brass	Flash white bronze over silver(e.g. Optargen®)
Dielectric	PP	
Gasket	Silicone	

Dieses Dokument ist urheberrechtlich geschützt ● This document is protected by copyright ● Rosenberger Hochfrequenztechnik GmbH & Co. KG

Rosenberger Hochfrequenztechnik GmbH & Co. KG
P.O.Box 1260 D-84526 Tittmoning Germany
www.rosenberger.com

Tel. : +49 8684 18-0
Email : info@rosenberger.com

Electrical data

Impedance	50 Ω
Frequency	DC to 7.5 GHz
Return loss	≥ 40 dB, DC to 2.5 GHz
	≥ 38 dB, 2.5 to 6 GHz
	≥ 28 dB, 6 to 8.3 GHz
Insertion loss	≤ 0.05 dB
Insulation resistance	≥ 10^4 MΩ
Center contact resistance	≤ 0.4 mΩ
Outer contact resistance	≤ 1.5 mΩ
Working voltage (at sea level)	500 V rms, 50 Hz
Power handling (at 20 °C, sea level, VSWR 1.0)	1800 W @ 1 GHz
	800 W @ 4 GHz
RF-leakage	≥ 128 dB up to 1 GHz
Intermodulation (3rd order)	≤ -117 dBm @ 2 x 20 W

Mechanical data

Mating cycles	min. 500
Center contact captivation: axial	≥ 200 N
radial	≥ 2 Ncm
Coupling torque (recommended)	25 to 30 Nm
Proof torque	max. 35 Nm

Environmental data

Temperature range	-45°C to +85°C
Rapid change of temperature	DIN EN 122190, clause 4.6.7
Corrosion salt mist	DIN EN 122190, clause 4.6.10
Vibration	DIN EN 122190, clause 4.6.3
Damp heat	DIN EN 122190, clause 4.6.6
Climatic tests	DIN EN 122190, clause 4.6.5 (45/85/56)
Degree of protection (mated pair)	IEC 60529, IP68
RoHS	compliant

Tooling

N/A

Suitable cables

N/A

Weight

Weight	231.9 g/pce

While the information has been carefully compiled to the best of our knowledge, nothing is intended as representation or warranty on our part and no statement herein shall be construed as recommendation to infringe existing patents. In the effort to improve our products, we reserve the right to make changes judged to be necessary.

For the installation of the electrotechnical equipment, particular electrotechnical expertise is required.

Draft	Date	Approved	Date
Inge Mühlauer	29.06.04	Chr. Janßen	01.03.21

Rev.	Engineering change number	Name	Date
g00	20-1927	S. Huber-Siegl	01.03.21

Rosenberger Hochfrequenztechnik GmbH & Co. KG
P.O.Box 1260 D-84526 Tittmoning Germany
www.rosenberger.com

Tel. : +49 8684 18-0
Email : info@rosenberger.com

Dieses Dokument ist urheberrechtlich geschützt ● This document is protected by copyright ● Rosenberger Hochfrequenztechnik GmbH & Co. KG