This circuit is proprietary to Linear Technology and supplied for use with Linear Technology parts.
Customer Notice: Linear Technology has made a best effort to design a circuit that meets customer-supplied specifications; however, it remains the customers responsibility to verify proper and reliable operation in the actual application, Component substitution and printed circuit board layout may significantly affect circuit performance or reliability. Contact Linear Applications Engineering for assistance.

REVISION HISTORY				
ECO	REV	DESCRIPTION	DATE	APPROVED
	2	PROTO	06/27/05	

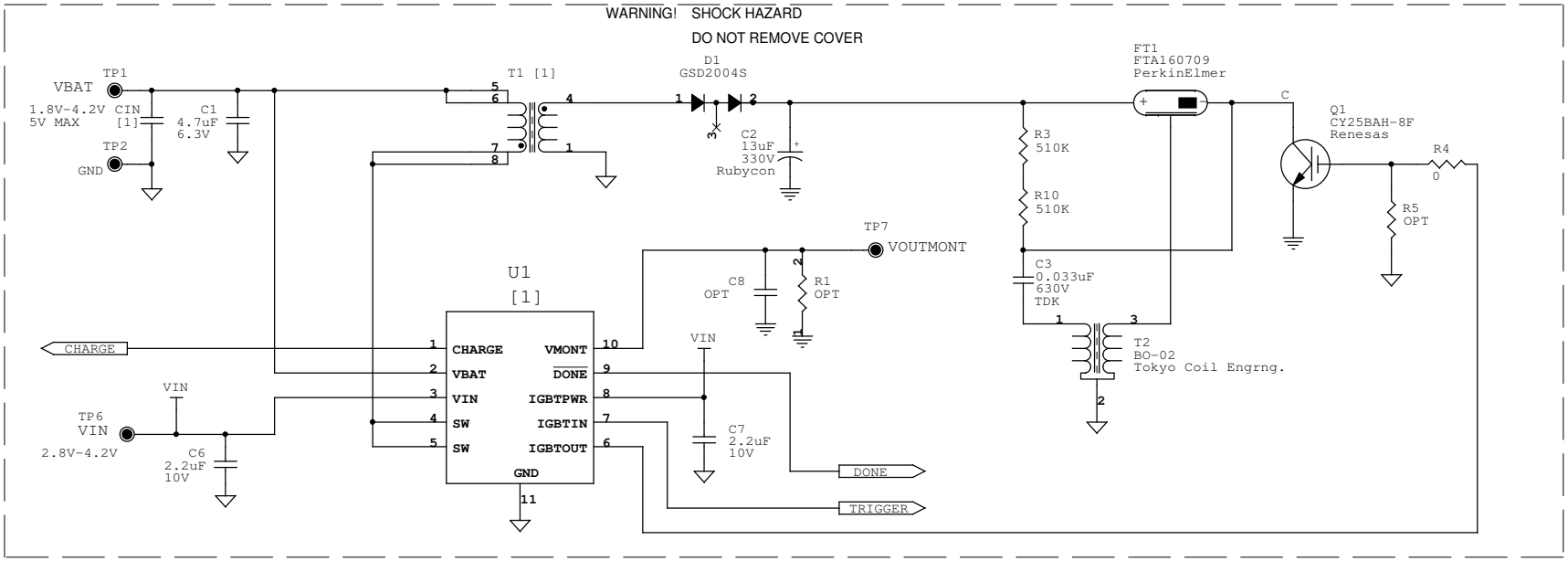

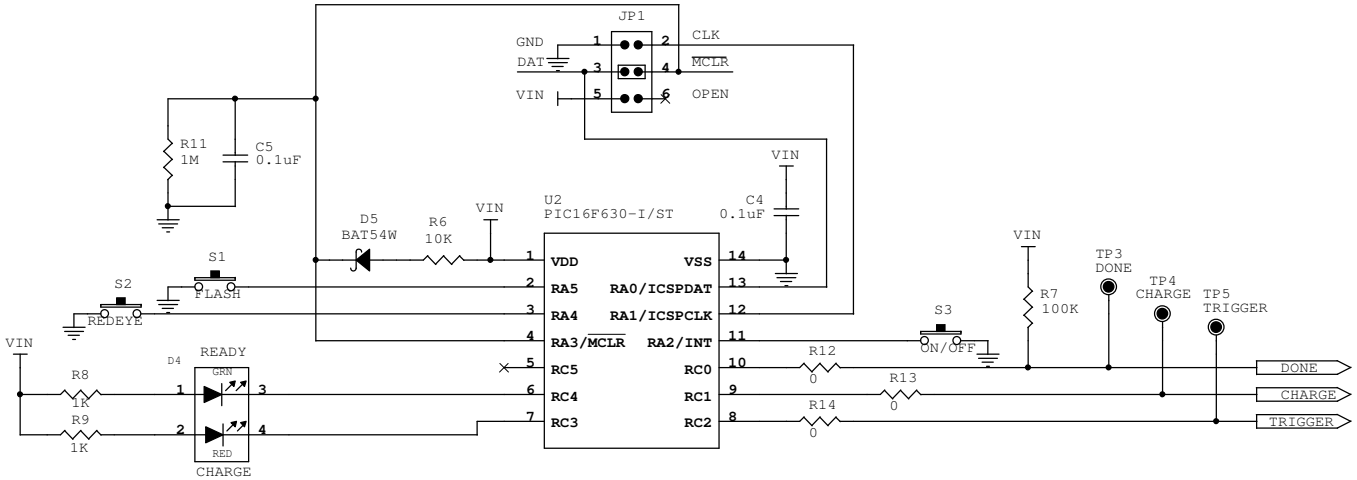

[1]

VERSION	U1	T1 (TDK)	CIN
-A	LT3485EDD-0	LDT565630T-001	CAP, 0805 10uF 20% 6.3V X5R
-B	LT3485EDD-1	LDT565630T-002	CAP, 0805 4.7uF 10% 6.3V X5R
-C	LT3485EDD-2	LDT565630T-003	CAP, 0805 10uF 20% 6.3V X5R
-D	LT3485EDD-3	LDT565630T-041	CAP, 0805 22uF 20% 6.3V X5R

CONTRACT NO.	
APPROVALS	DATE
DRAWN MEI	04/12/05
CHECKED	
APPROVED	
ENGINEER	
DESIGNER	
Friday, July 15, 2005	

LINEAR TECHNOLOGY
1630 McCarthy Blvd.
Milpitas, CA 95035
Phone: (408)432-1900
Fax: (408)434-0507

TITLE SCH, LT3485EDD-0/1/2/3, PHOTOFLASH CHARGER

SIZE	CAGE CODE	DWG NO	REV
Custom		DC895A	2

SCALE: FILENAME: 895A-2.DSN SHEET 1 OF 1