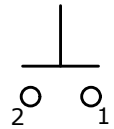

▲ CIRCUIT: SPST

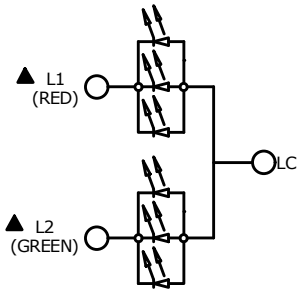

LED SCHEMATIC

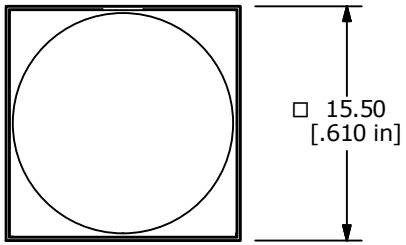

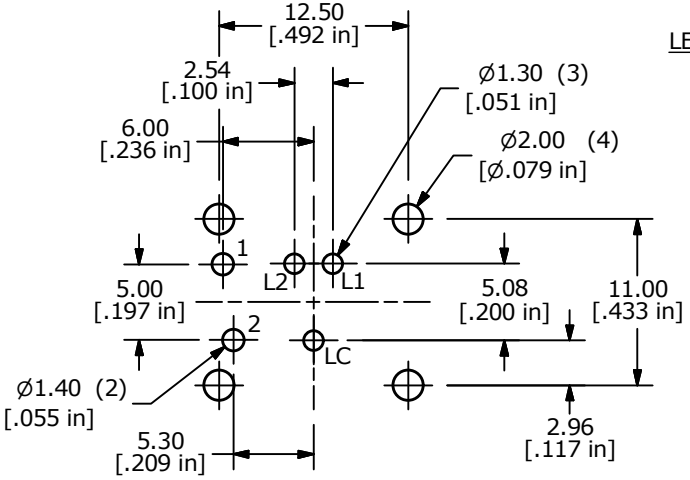

P.C.B. LAYOUT

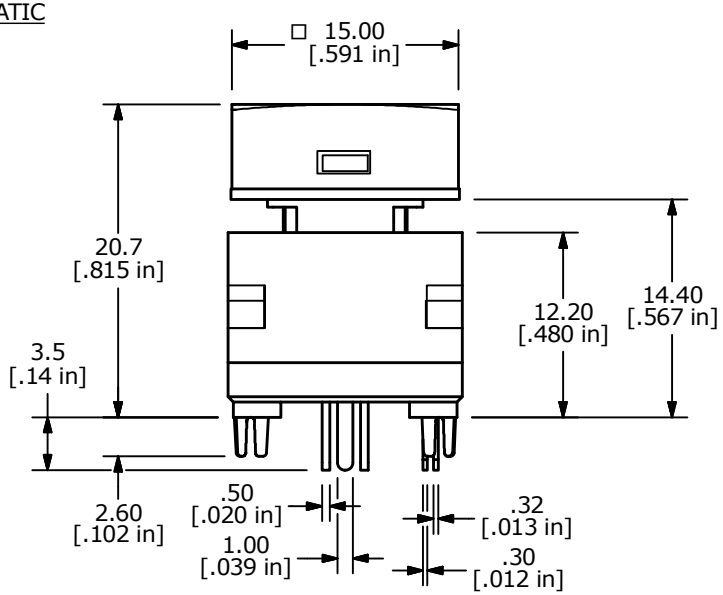

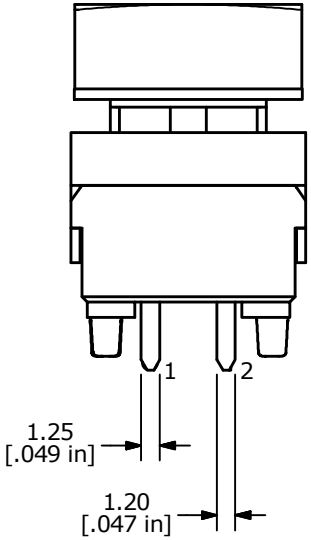

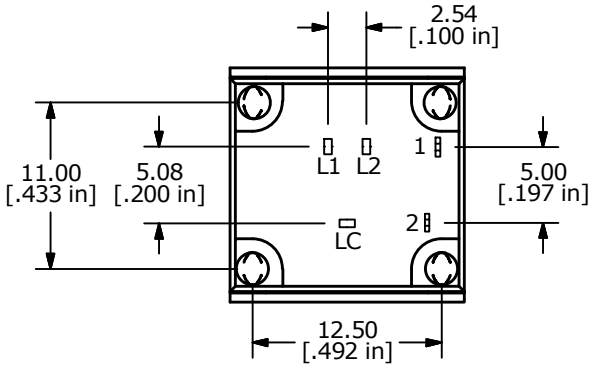

NOTES:
1. ALL DIMENSIONS IN MM [INCH]
2. GENERAL TOLERANCE: X.X = ± 0.4
   X.XX = ± 0.25
3. TERM. NUMBERS FOR REFERENCE ONLY.
4. RATING: 12VDC, 12mA; SPST
5. CONTACT MATERIAL: GOLD
6. CONTACT RESISTANCE: 50 MILLI-OHM MAX.
7. INSULATION RESISTANCE: 500VDC, 100 MEGA-OHM MIN.
8. ▲ OPERATING FORCE: 150 ± 100gf
9. OPERATING LIFE: 200,000 CYCLES
10. OPERATING TEMP: -20˚C to +70˚C
11. ▲ LED COLORS: RED, GREEN
12. TRAVEL: 2.20mm ±0.20mm
13. ▲ DENOTES CRITICAL PARAMETER.

▲ LED SPECS	UNITS	RED	GREEN
FORWARD CURRENT	mA	25	25
FORWARD VOLTAGE @20mA	VDC	1.95	2.0
LUMINOUS INTENSITY @10mA	mcd	77	412

REV	PCR NO	DESCRIPTION	DATE	BY
C	23583	correct L3 to LC on lower view	10/1/18	MW
B	19589	CHANGED DIMS: was 15.6 & 5.07	1/14/11	BGL
A	18147	New Release	6/18/08	rc

THE INFORMATION CONTAINED IN THIS DOCUMENT IS PROPRIETARY TO E-SWITCH AND IS NOT TO BE COPIED OR TRANSFERRED

E-SWITCH®

TITLE LP6OA1ASRG

SCALE	DATE	DR	DWG	REV
2:1	6/18/2008	rc	B220001	C