REV	ECN NO	REVISIONS	DRN	CKD	APP	DATE
A	———	NEW RELEASE	TWC			

NOTES:
1. COMPONENT MOLDED IN A CLEAR TRANSMISSIVE POLYCARBONATE, UL 94V-0 GRADE.
2. COMPONENT DESIGNED TO BE PRESSED INTO P.C. BOARD.
3. DIALIGHT LIGHTPIPE PART NUMBER: 515-1153F
4. RECOMMENDED LIGHT SOURCE:RT.ANGLE 1208 PKG (.120 X .080 X .040" HIGH)
5. 597-2751-602F FOR 20 PC SAMPLE STRIP, -607F FOR FULL REEL R/G BI-COLOR
   597-2712-602F FOR 20 PC SAMPLE STRIP, -607F FOR FULL REEL R/G/B TRI-COLOR
6. ALL SURFACES ARE POLISHED WITH EXCEPTION OF PRESS FIT PINS.

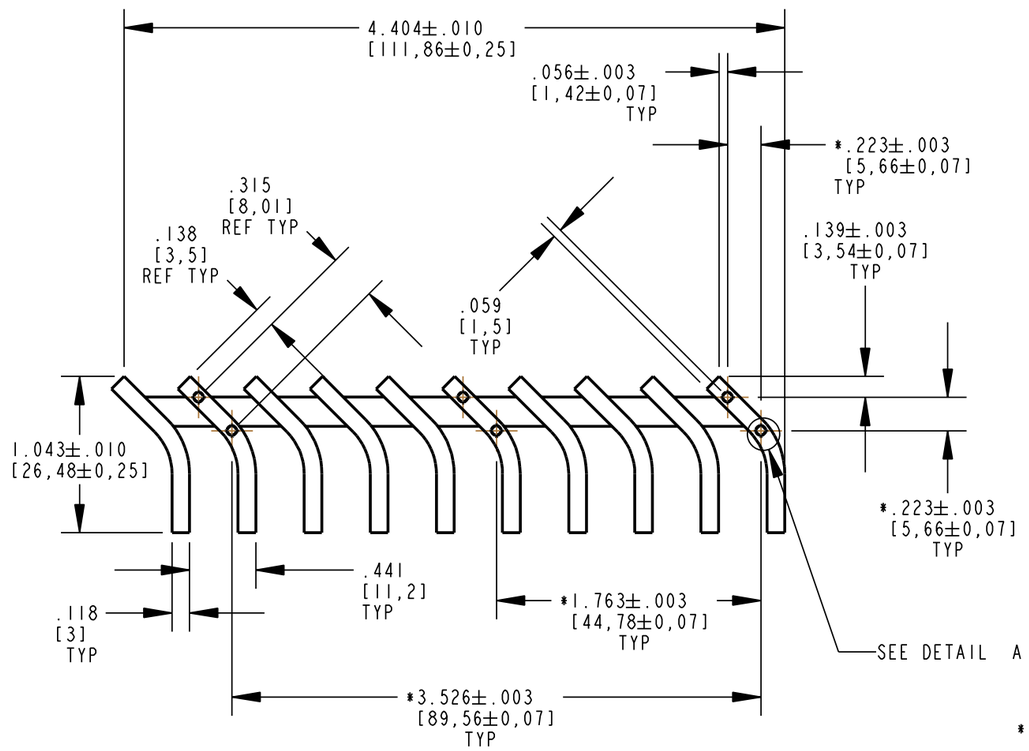

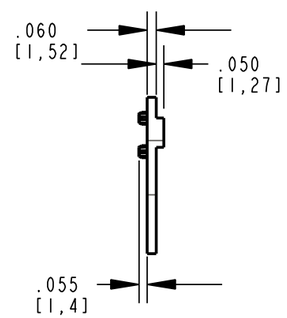

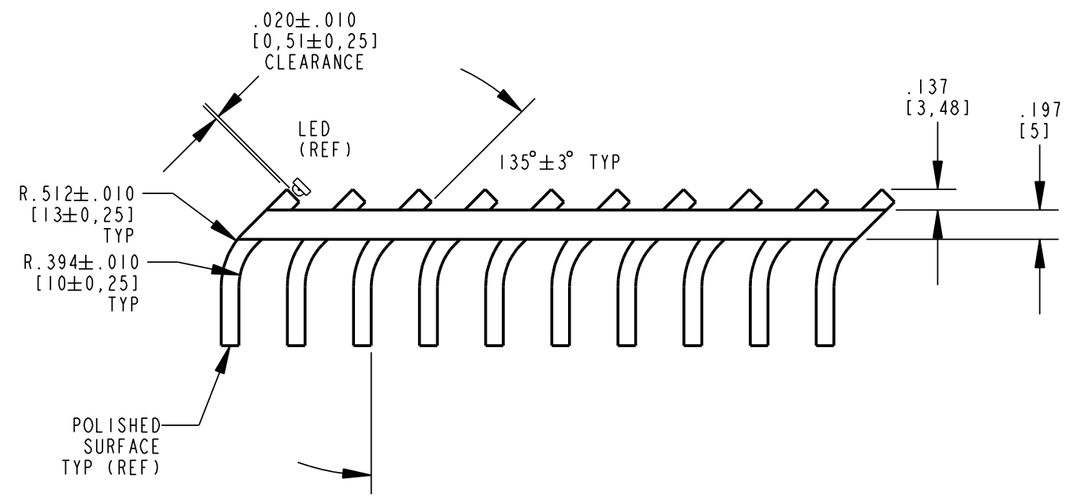

* DENOTES CRITICAL DIMENSION
OR SPECIFICATION

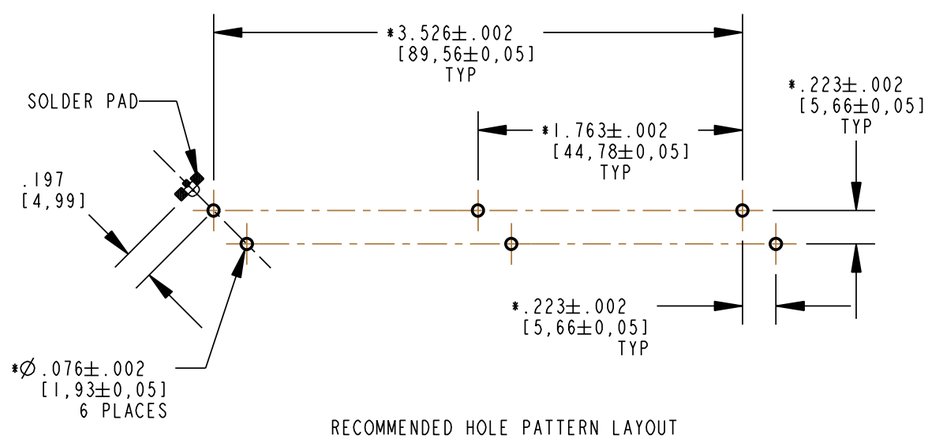

RECOMMENDED HOLE PATTERN LAYOUT

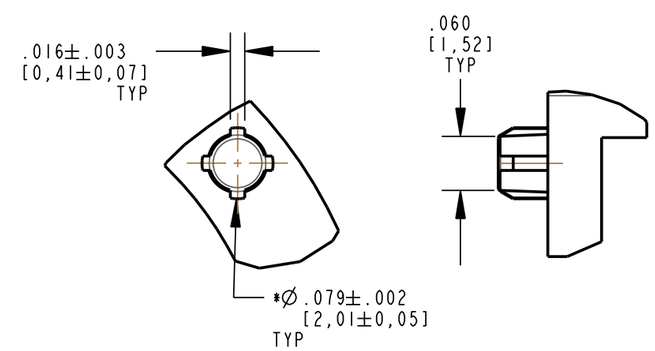

DETAIL A
SCALE 6.000

RoHS Compliant 515-1153F

Part Numbers with the "F" suffix ending are RoHS Compliant. Packaging is marked with "RoHS Compliant" label or equivalent markings.

THIS DRAWING AND THE CONTENTS HEREIN ARE CONFIDENTIAL AND THE SOLE PROPERTY OF DIALIGHT. REPRODUCTION OF THIS DRAWING OR CONSTRUCTION OF ANY PARTS WITHIN THIS DRAWING ARE FORBIDDEN WITHOUT THE WRITTEN CONSENT OF DIALIGHT.

SCALE: 1.000
ALL DIM'S IN: INCHES (MM)
TOLERANCES:
UNLESS OTHERWISE SPECIFIED
FRACTIONS: ±1/64
DECIMALS (.XX): ±.01
DECIMALS (.XXX): ±.005
DECIMALS (.XXXX): ±.0005
ANGLES: ±1°
FINISH:
FSCM 83330

DRAWING NUMBER C-17352
REV A
TITLE LIGHTPIPE, ANGLED, 10 POSITION RoHS COMPLIANT
MATERIAL

Dialight
1501 ROUTE 34 SOUTH
FARMINGDALE, NJ 07727

SHEET 1 OF 1
FAMILY TABLE: