NOTES:
1. MATERIAL: COPPER ALLOY
2. TIN PLATED TERMINAL FINISH:
   TIN (Sn), THICKNESS = 0.5 MICROMETRE MINIMUM
   NICKEL (Ni) UNDERPLATE OVERALL
3. GOLD PLATED TERMINAL FINISH:
   SELECTIVE GOLD (Au) IN CONTACT AREA, THICKNESS = 0.76 MICROMETRE MINIMUM
   SELECTIVE TIN (Sn) IN GRIP AREA, THICKNESS = 2.5 MICROMETRE MINIMUM
   NICKEL (Ni) UNDERPLATE OVERALL
4. SILVER PLATED TERMINAL FINISH:
   SELECTIVE SILVER (Ag) IN CONTACT AREA, THICKNESS = 1.9 MICROMETRE MINIMUM
   SELECTIVE TIN (Sn) IN GRIP AREA, THICKNESS = 2.5 MICROMETRE MINIMUM
   NICKEL (Ni) UNDERPLATE OVERALL
5. MATES WITH: REFERENCE 936430010 PSD
6. PACKAGING SPECIFICATION: 936420010 PSK
7. APPLICATION SPECIFICATION: ATS-639033100
8. GRIP INSULATION STEP HEIGHT
9. TSC ON A DIMENSION TO BE INTERPRETED AS THE DISTANCE TO A THEORETICAL SHARP CORNER AS IF THE RADIUS WERE NOT PRESENT
10. STANDARD PLATING OPTION IS SILVER; CONTACT SALES OFFICE FOR ALTERNATIVE PLATING OPTIONS

LAST INSPECTION NUMBER USED: 15

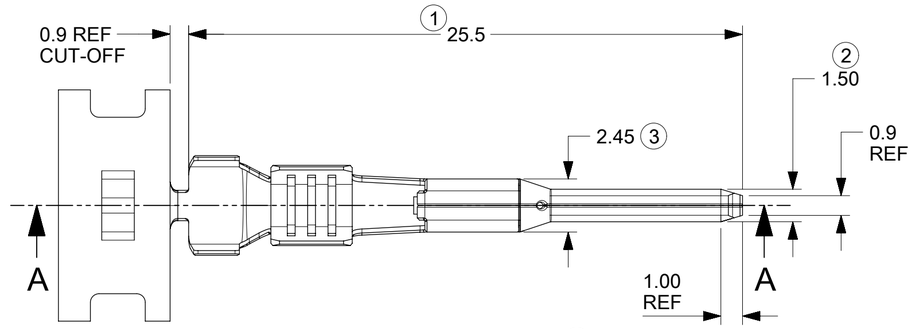

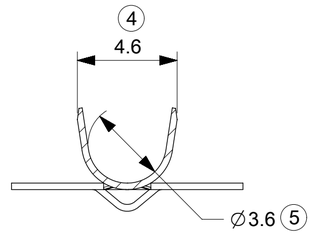

SECTION B-B

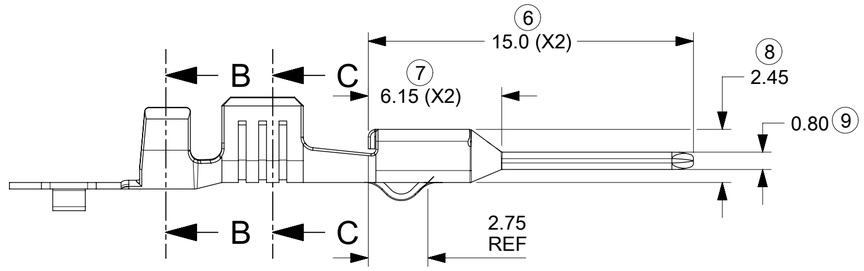

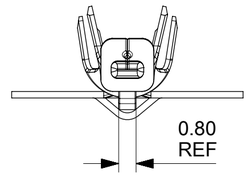

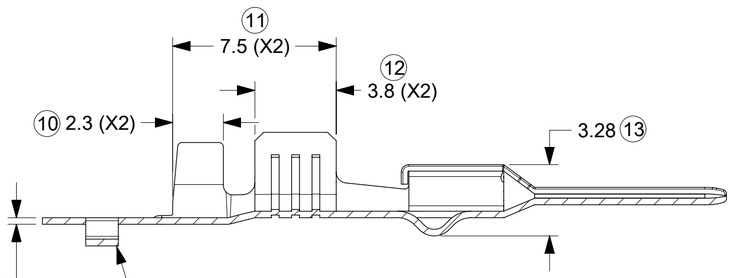

SECTION A-A

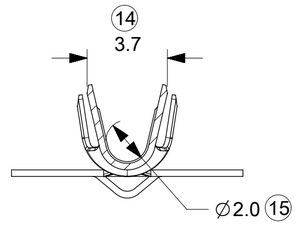

SECTION C-C

CARRIER BUMP DIRECTION:
POINTS DOWN FOR TIN PLATED TERMINALS
POINTS UP FOR PRECIOUS METAL PLATED TERMINALS

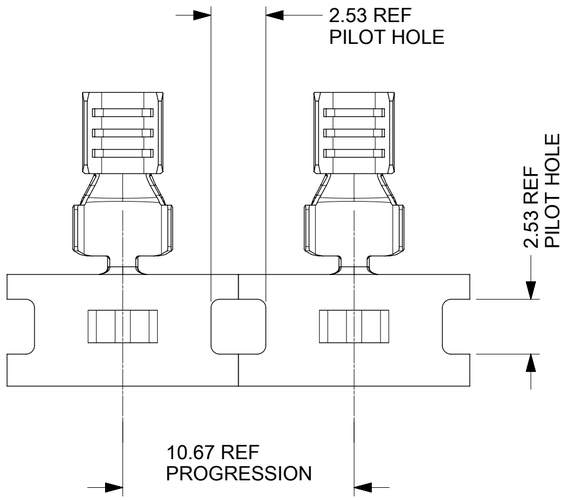

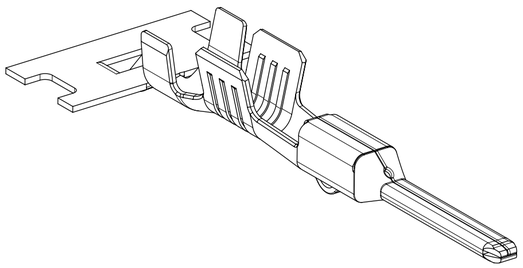

PART NUMBER	DESCRIPTION	AVAILABILITY
93642-0001	REEL OF SRC BLADE TERMINALS. TIN PLATED	SEE NOTE 10
93642-1001	REEL OF SRC BLADE TERMINALS. SILVER PLATED	AVAILABLE
93642-2001	REEL OF SRC BLADE TERMINALS. GOLD PLATED	SEE NOTE 10

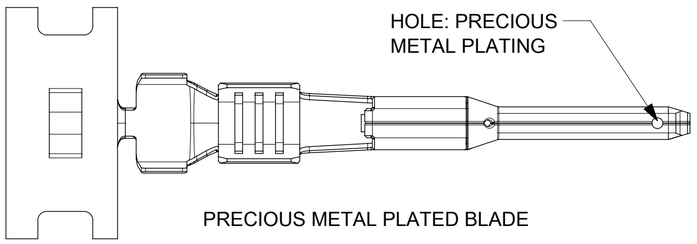

PRECIOUS METAL PLATED BLADE

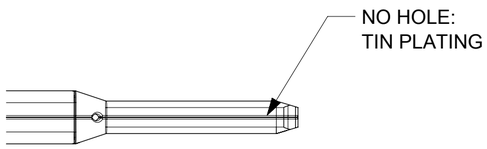

TIN PLATED BLADE

QUALITY SYMBOLS: = 0 / = 0 / = 0 / = 0 / = 0 / = 0 / = 0 / = 0

EC DESCRIPTION
EC NO: 101384 2015/10/08
DRWN: KREILLY 2015/10/22
CHK'D: JDWALLACE 2015/10/22
APPR: JDWALLACE

GENERAL TOLERANCES (UNLESS SPECIFIED)
ANGULAR TOL ± 2.0 °
4 PLACES ±
3 PLACES ±
2 PLACES ± 0.2
1 PLACE ± 0.35
0 PLACES ±
DRAFT WHERE APPLICABLE MUST REMAIN WITHIN DIMENSIONS

REV A1

THIS DRAWING CONTAINS INFORMATION THAT IS PROPRIETARY TO MOLEX INCORPORATED AND SHOULD NOT BE USED WITHOUT WRITTEN PERMISSION

DIMENSION UNITS: mm
SCALE: 5:1
DRWN BY: AJOBRIEN DATE: 2015/03/20
CHK'D BY: JFLETCHER DATE: 2015/03/24
APPR BY: JDWALLACE DATE: 2015/04/17
DRAWING SIZE: A2
THIRD ANGLE PROJECTION

molex

SRC BLADE TERMINAL 2.5MM²
THIN WALL CABLE AS PER ISO 6722

PRODUCT CUSTOMER DRAWING

SERIES	MATERIAL NUMBER	CUSTOMER
93642	SEE TABLE	GENERAL MARKET

DOCUMENT NUMBER	DOC TYPE	DOC PART	SHEET NUMBER
936420010	PSD	000	1 OF 1

RELEASE STATUS	P1	RELEASE DATE	2015/10/23 09:07:45

FORMAT: molex-tb-prod-A2
REVISION: B
DATE: 2015/8/12