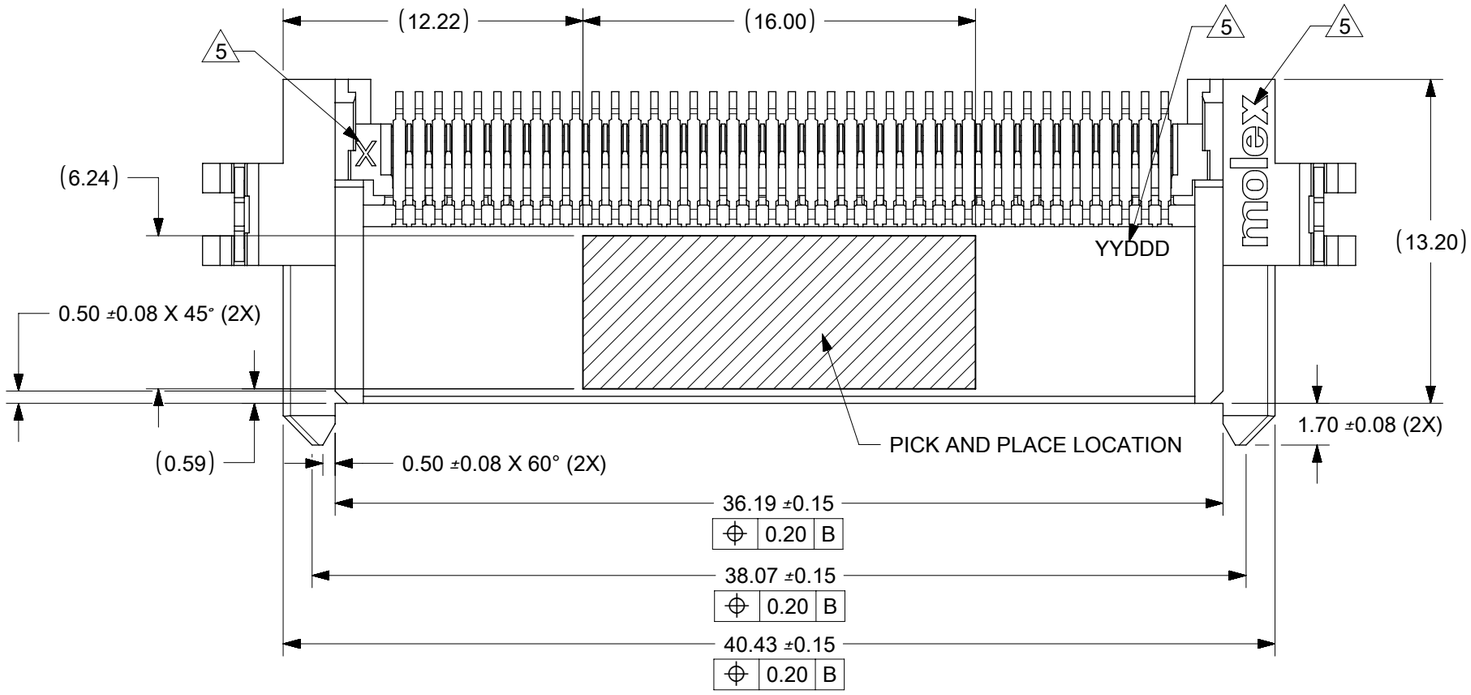

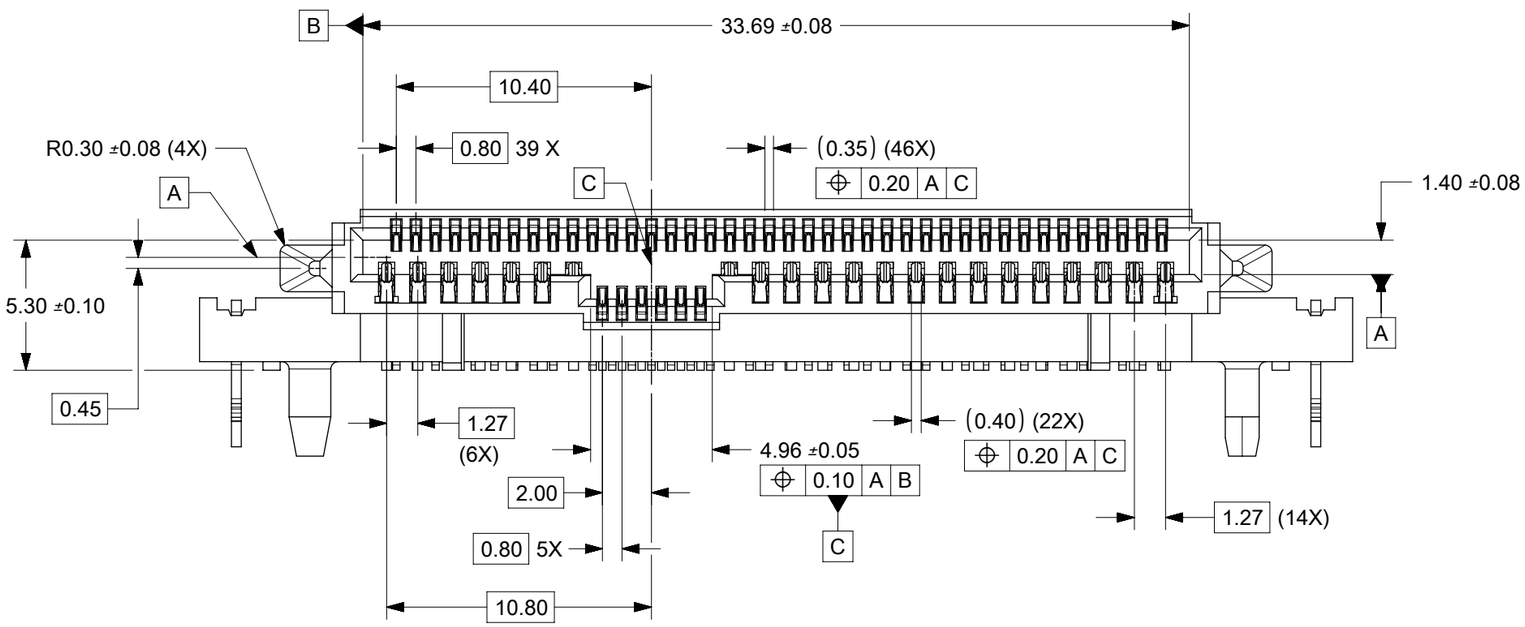

NOTES:
1. MATERIAL
   HOUSING: LIQUID CRYSTALLINE POLYMER,
   GLASS FILLED, UL 94V-0, COLOR: BLACK
   TERMINAL: COPPER ALLOY
   FORKLOCK: COPPER ALLOY
2. FINISHES:
   TERMINAL CONTACT: 0.76µm MIN. SELECTIVE GOLD OVER 1.27µm MIN. NICKEL UNDERPLATE
   TERMINAL SOLDERTAIL: 2.54µm MIN. TIN OVER 1.27µm MIN. NICKEL UNDERPLATE
   FORKLOCK: 2.54µm MIN. TIN OVER 1.27µm MIN. NICKEL UNDERPLATE
3. PRODUCT SPECIFICATION: PS-78776-001
4. PACKAGING SPECIFICATION : SEE TABLE
5. MOLEX LOGO, SERIES NUMBER,CAVITY ID AND DATE CODE LOCATED APPROXIMATELY AS SHOWN
6. NON FUNCTIONAL CORE HOLE MAY VARY
7. PRODUCT IS COMPLIANT TO RoHS DIRECTIVE WITH THE FOLLOWING BANNED SUBSTANCES - LEAD, MERCURY, CADMIUM, HEXAVALENT CHROMIUM, POLYBROMINATED BIPHENYLS AND POLYBROMINATED DIPHENYL ETHERS.
8. REFER TO AS-78776-001 FOR PCB ROUTING RECOMMENDATIONS.

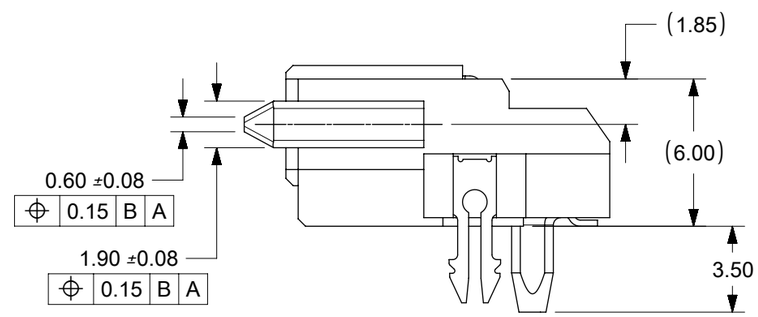

SYMBOLS	
F = 0	
C = 0	
E = 0	
S = 0	
▼ = 0	
C = 0	
☒ = 0	
■ = 0	
▽ = 0	

THIS DRAWING CONTAINS INFORMATION THAT IS PROPRIETARY TO MOLEX ELECTRONIC TECHNOLOGIES, LLC AND SHOULD NOT BE USED WITHOUT WRITTEN PERMISSION

DIMENSION UNITS	SCALE
MM	NTS

GENERAL TOLERANCES (UNLESS SPECIFIED)

ANGULAR TOL	±	3.0 °
4 PLACES	±	
3 PLACES	±	
2 PLACES	±	0.2
1 PLACE	±	
0 PLACES	±	

DRAFT WHERE APPLICABLE MUST REMAIN WITHIN DIMENSIONS

CURRENT REV DESC: ADD BLADE OPTION

EC NO: 617293
DRWN: KUCHILA 2018/02/23
CHK'D: SHONG 2019/06/26
APPR: SHONG 2019/06/26

INITIAL REVISION:
DRWN: CGOH 2012/06/25
APPR: BOKOK 2012/12/05

THIRD ANGLE PROJECTION

DRAWING	SERIES
A3-SIZE	78776

molex

SAS/ PCIE
RECEPTACLE, RIGHT-ANGLE SMT, 4.15MM HEIGHT

PRODUCT CUSTOMER DRAWING

DOCUMENT NUMBER	DOC TYPE	DOC PART	REVISION
SD-78776-001	PSD	001	A

MATERIAL NUMBER	CUSTOMER	SHEET NUMBER
SEE TABLE	IBM	1 OF 3

DOCUMENT STATUS	P1	RELEASE DATE	2019/06/26 10:39:23

FORMAT: master-tb-prod-A3
REVISION: H
DATE: 2018/01/18

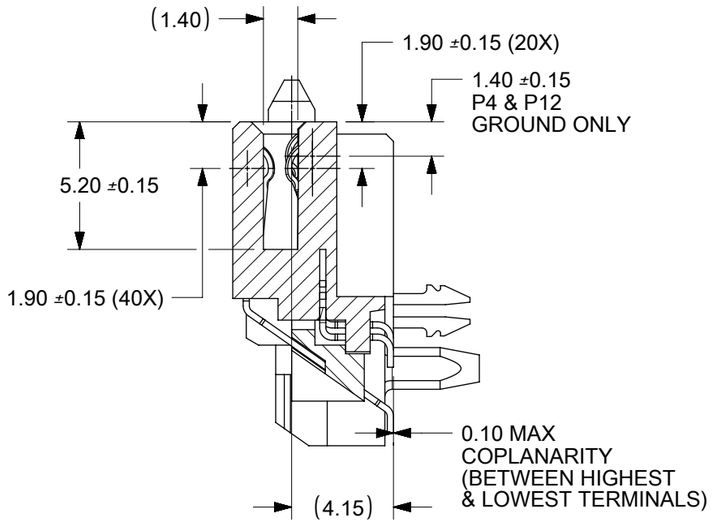

SECTION Z-Z

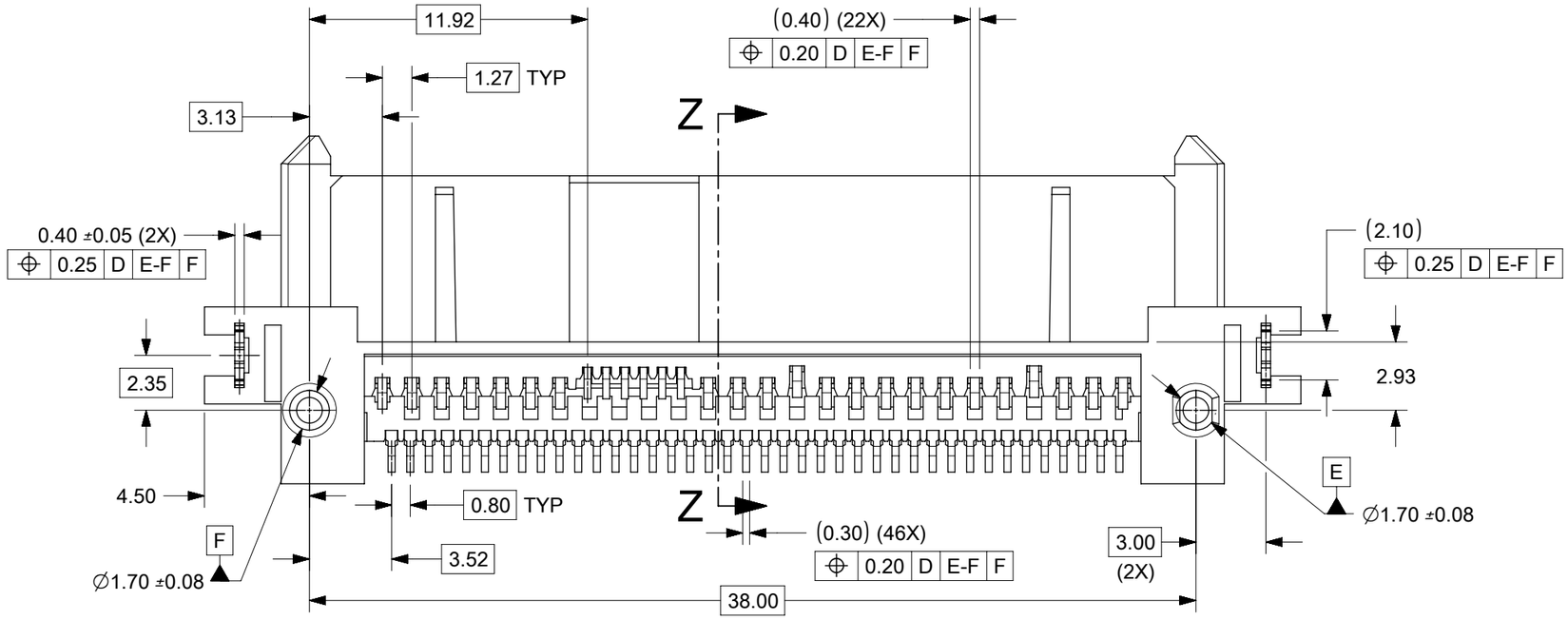

FORKLOCK OPTION

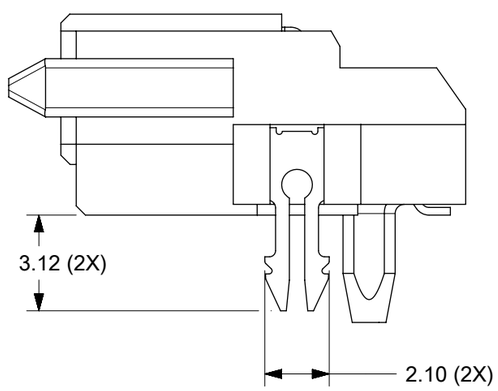

BLADE OPTION

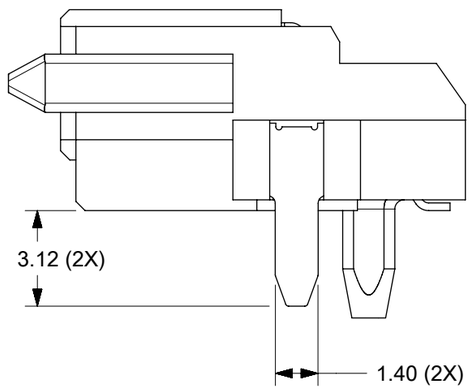

PART NUMBER	PACKAGING SPECIFICATION	HOLD DOWN OPTION
78776-0001	PK-78776-001 (TRAY)	FORKLOCK
78776-1001	PK-151002-0002 (TAPE & REEL)	BLADE

SYMBOLS: A = 0; C = 0; E = 0; S = 0; ▼ = 0; C = 0; ☒ = 0; ■ = 0; ▽ = 0

DIMENSION UNITS: MM
SCALE: NTS
GENERAL TOLERANCES (UNLESS SPECIFIED)
ANGULAR TOL ± 3.0 °
4 PLACES ±
3 PLACES ±
2 PLACES ± 0.2
1 PLACE ±
0 PLACES ±
DRAFT WHERE APPLICABLE MUST REMAIN WITHIN DIMENSIONS

THIS DRAWING CONTAINS INFORMATION THAT IS PROPRIETARY TO MOLEX ELECTRONIC TECHNOLOGIES, LLC AND SHOULD NOT BE USED WITHOUT WRITTEN PERMISSION

CURRENT REV DESC: ADD BLADE OPTION

EC NO: 617293
DRWN: KUCHILA 2018/02/23
CHK'D: SHONG 2019/06/26
APPR: SHONG 2019/06/26

INITIAL REVISION:
DRWN: CGOH 2012/06/25
APPR: BOKOK 2012/12/05

THIRD ANGLE PROJECTION
DRAWING: A3-SIZE
SERIES: 78776

molex

SAS/ PCIE
RECEPTACLE, RIGHT-ANGLE SMT, 4.15MM HEIGHT

PRODUCT CUSTOMER DRAWING

DOCUMENT NUMBER	DOC TYPE	DOC PART	REVISION
SD-78776-001	PSD	001	A

MATERIAL NUMBER	CUSTOMER	SHEET NUMBER
SEE TABLE	IBM	2 OF 3

DOCUMENT STATUS	P1	RELEASE DATE	2019/06/26 10:39:23

FORMAT: master-tb-prod-A3
REVISION: H
DATE: 2018/01/18

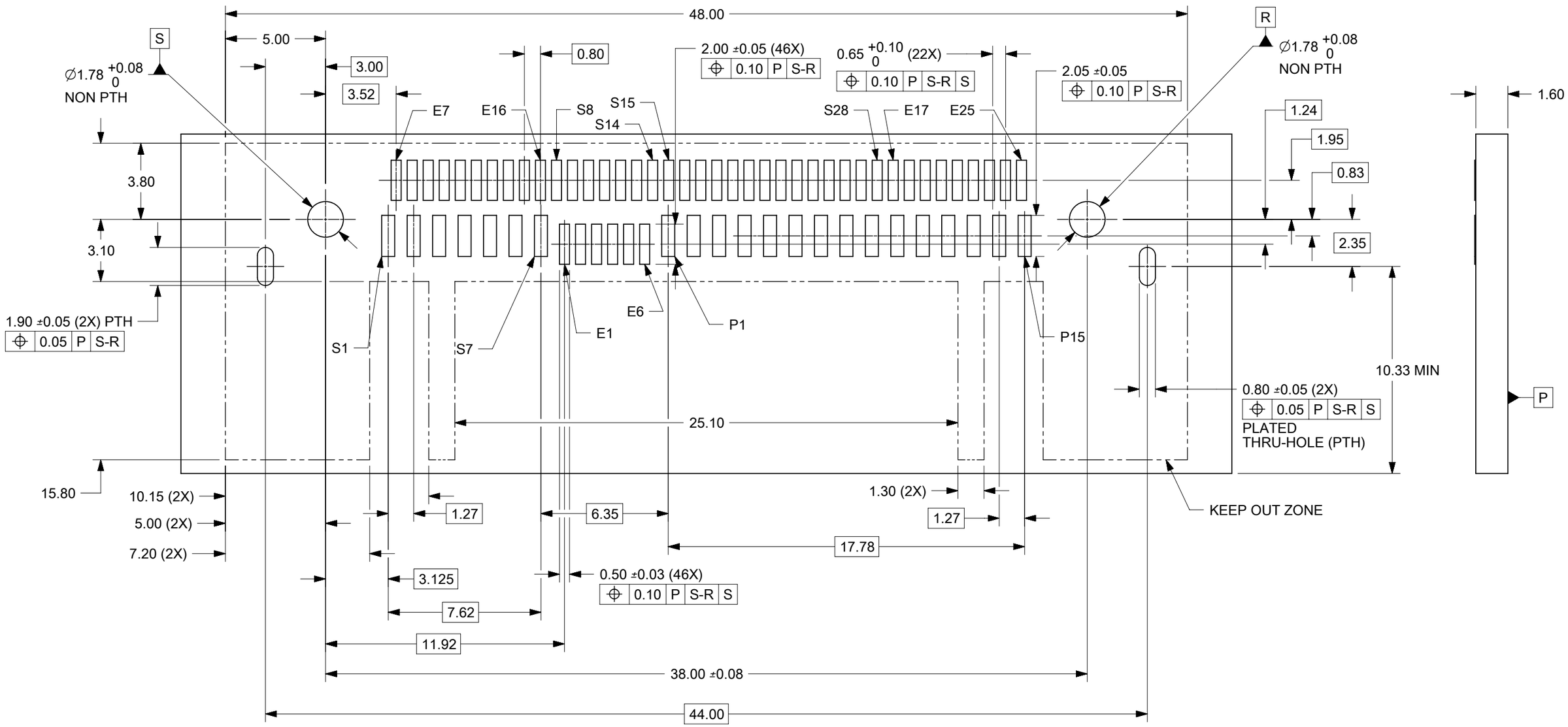

RECOMMENDED PCB LAYOUT

SYMBOLS	
E/A	= 0
E/C	= 0
E/P	= 0
S	= 0
▼	= 0
C	= 0
☒	= 0
■	= 0
▽	= 0

THIS DRAWING CONTAINS INFORMATION THAT IS PROPRIETARY TO MOLEX ELECTRONIC TECHNOLOGIES, LLC AND SHOULD NOT BE USED WITHOUT WRITTEN PERMISSION

DIMENSION UNITS	SCALE
MM	NTS

GENERAL TOLERANCES (UNLESS SPECIFIED)

ANGULAR TOL	±	3.0 °
4 PLACES	±	
3 PLACES	±	
2 PLACES	±	0.2
1 PLACE	±	
0 PLACES	±	

DRAFT WHERE APPLICABLE MUST REMAIN WITHIN DIMENSIONS

CURRENT REV DESC: ADD BLADE OPTION

EC NO: 617293
DRWN: KUCHILA 2018/02/23
CHK'D: SHONG 2019/06/26
APPR: SHONG 2019/06/26

INITIAL REVISION:
DRWN: CGOH 2012/06/25
APPR: BOKOK 2012/12/05

THIRD ANGLE PROJECTION | DRAWING: A3-SIZE | SERIES: 78776

molex

SAS/ PCIE
RECEPTACLE, RIGHT-ANGLE SMT, 4.15MM HEIGHT

PRODUCT CUSTOMER DRAWING

DOCUMENT NUMBER	DOC TYPE	DOC PART	REVISION
SD-78776-001	PSD	001	A

MATERIAL NUMBER	CUSTOMER	SHEET NUMBER
SEE TABLE	IBM	3 OF 3

DOCUMENT STATUS	P1	RELEASE DATE	2019/06/26 10:39:23

FORMAT: master-tb-prod-A3
REVISION: H
DATE: 2018/01/18