LEADERSHIP in Connector Design

KYCON

MODULAR JACKS AND PLUGS

GDX Series

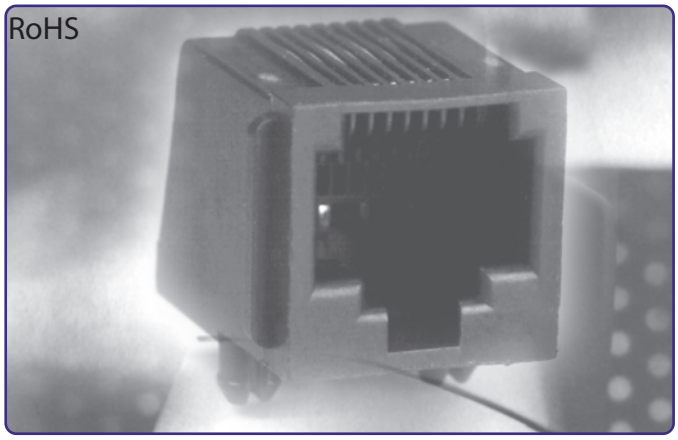

GDX Series
Right Angle Modular Jack

Features

- 0.595" Height
- Snap-In Board Retention Tabs
- Panel Stops
- Available in 4, 6 and 8 Position Housings
- UL Recognized File No. E134345
- CSA/NRTL Certified File No. LR78160

Performance Specifications

Materials and Finish

Housing Material
PBT Thermoplastic, UL 94V-0 Rated, Black Color

Contact Material
Phosphor Bronze

Contact Plating Option

Standard: Gold Flash on Contact Area
Tin on Termination End

50: 50u" Gold on Contact Area to
Comply with FCC Requirements Under No. 47 C.F.R. Part 68,
Subpart F, Tin on Termination End

Shield Material: Nickel Plated, Copper Alloy

Electrical Characteristics

Current Rating : 1.5 Amps

Voltage Rating : 125V DC

Insulation Resistance : 500 Megohms Min

Contact Resistance : 20 Milliohms Max

Dielectric Withstanding Voltage :1000V rms, 60Hz

Operating Temperature : -40°C to 85°C

Documentation & Ordering Information

Drawing	Stock	CofC
Sample	Email	RFQ

Kycon Part #	GDX-PA-1010

Part Number Builder

GDX-P _ A _ 1010 _

- GDX-P: Series
- A: Panel stops Shield Option
- 1010: Position & Contact
- _: Plating Option

Series
GDX-P - Perpendicular Modular Jack

Shield Option & No of Positions and Contacts

Panel stops & Shield Option	No of Positions and Contacts								
A With Panel Stops Non-Shielded		-	-	-	-	-	-	-	1010
AS With Panel Stops Shielded	-	-		-	- -	-	-	-	1010
N W\out Panel Stops Non-Shielded	-	-		-	--	-		-	1010
NS With Panel Stop Non-Shielded	-	-	64*	66*	-	-	-	-	1010

* Not available with 50µ" Gold Plating Option

Plating Option
Blank - Gold Flash
50 - 50µ" Gold Plating

GDX Series Dimensions

Dimensions in In [mm]
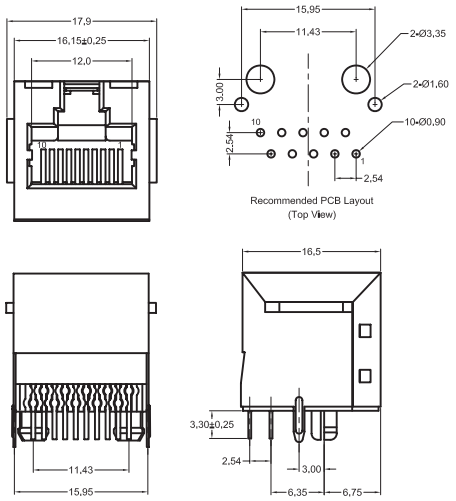
GDX-PAS-1010