DH-7BB REV. V

REVISIONS			RELEASED	
REV.		DESCRIPTION	DATE	APPROVED
T	41113	REDRAWN, FIND NOS 15,16,& 17 ADDED	99/11/16	RS
U	42196	FIND 11 WAS 51805-011	00/04/12	RS
V	0662-03	.410 DIM WAS .438	03/07/31	CC

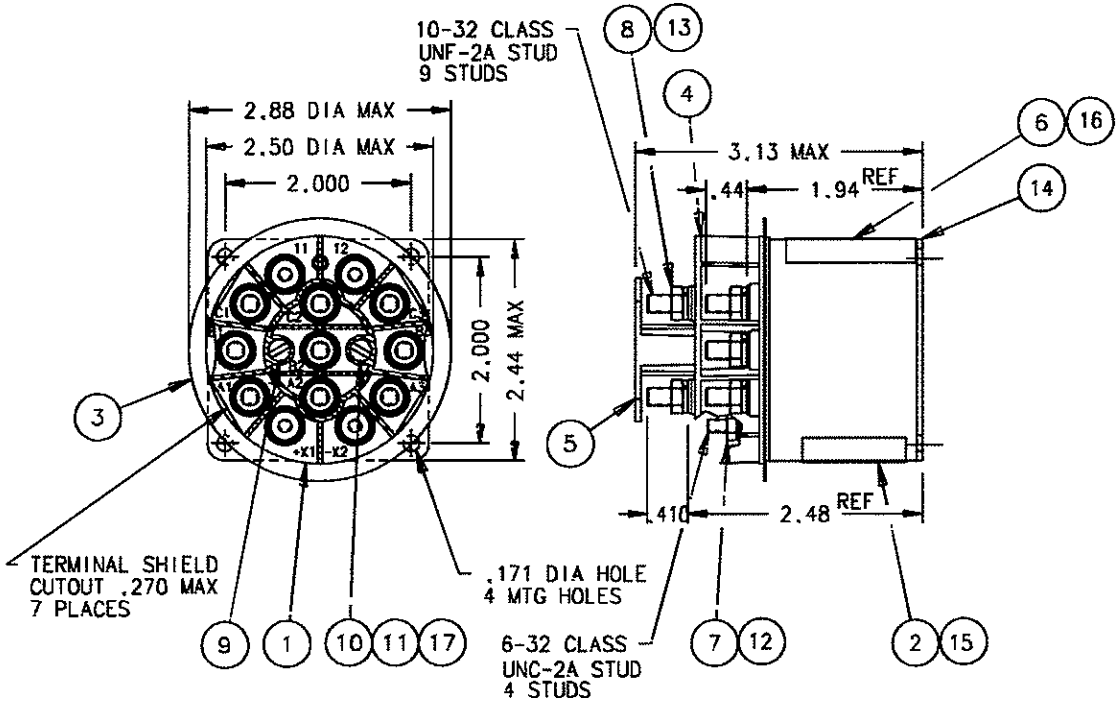

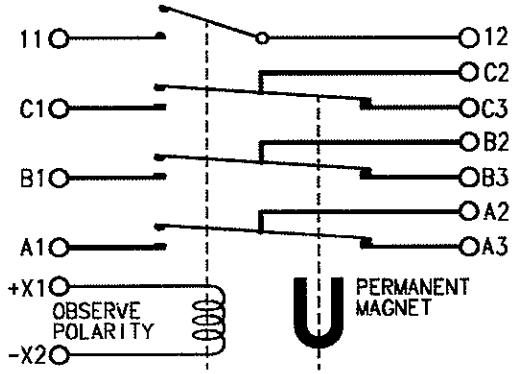

NOTE:
TERMINAL SHIELD IS NOTCHED FOR DRAINAGE

CONSTRUCTION	HERMETICALLY SEALED
NOMINAL VOLTAGE	115/200 V, 400HZ
CONTACT RATING	50 AMP, 115 V, 400 HZ
COIL RATING	28 VDC
PICKUP	18 V MAX HOT
DROPOUT	1-7 V MAX HOT
PICKUP TIME	50 MS MAX AT 28 V
DROPOUT TIME	50 MS MAX AT 28 V
BOUNCE	5 MS MAX
RATED DUTY	CONTINUOUS
VIBRATION	PROC 1, MIL-E-5272
AUX CONTACT	SPST NO
AUX CONTACT RATING	5 AMP, 28 VDC OR 115 V, 400 HZ
MAX WEIGHT	.89 LBS
AMBIENT TEMP	-65°F TO 165°F

NOTE:
TERMINAL INSTALLATION TORQUE: 8-32 6-8 IN/LBS
10-32 15-20 IN/LBS

FIND NO	QTY REQD	PART OR IDENTIFYING NO	NOMENCLATURE OR DESCRIPTION	FSCM NO	DRAWING OR SPECIFICATION	MATERIAL OR NOTE
17	2	51701-180	WASHER - 3/16 X .103 X .015 FLAT			MYLAR
16	1	39529-038	OVERLAY WIRING PLATE			
15	1	39529-001	OVERLAY NAMEPLATE			
14	1	19888-010	CONTACTOR ASSEMBLY - PRIMARY			
13	9	51810-054	WASHER - #10 SPLIT TYPE LOCK			BRONZE
12	4	51806-014	WASHER - #6 SPLIT TYPE LOCK			BRONZE
11	2	51805-014	WASHER - #5 SPLIT TYPE LOCK			BRONZE
10	1	51205-391	SCREW - 5-40 X 1 1/8 RD. HD.			BRASS
9	1	51205-591	SCREW - 5-40 X 3/8 RD.HD.			BRASS
8	9	50410-054	NUT - #10-32 X 5/16 X 9/64			BRASS
7	4	50406-034	NUT - #6-32 X 1/4 X 5/64			BRASS
6	1	19203-001	PLATE - WIRING DIAGRAM			
5	1	17062-001	SHIELD - TERMINAL ZYTEL 51			
4	1	17061-001	SHIELD - TERMINAL ZYTEL 51			
3	1	17002-001	PLATE - SHIELD			
2	1	16043-001	PLATE - NAME			
1	1	15537-015	PLATE - BASE COVER			

UNLESS OTHERWISE SPECIFIED DIMENSIONS ARE IN INCHES TOLERANCES ON

2 PL DEC.	3 PL DEC.	ANGLES
±.030	±.010	± 1°

REF

GAEC GR-835EA
NORTHRUP 64R100-1

DR BY	CSC	03/08/19
CHK BY	CC	03/08/20
ENGR	CJB	03/08/21
MFG	PM	03-08-22

SIZE C | CODE IDENT 74063 | SCALE NONE | SHEET

tyco Electronics
Hartman Division, 175 N. DIAMOND STREET MANSFIELD, OHIO 44902

CONTACTOR - 3PDT
HERMETICALLY SEALED 093

DWG NO. DH-7BB

REF TYCO P/N 0-1616037-7