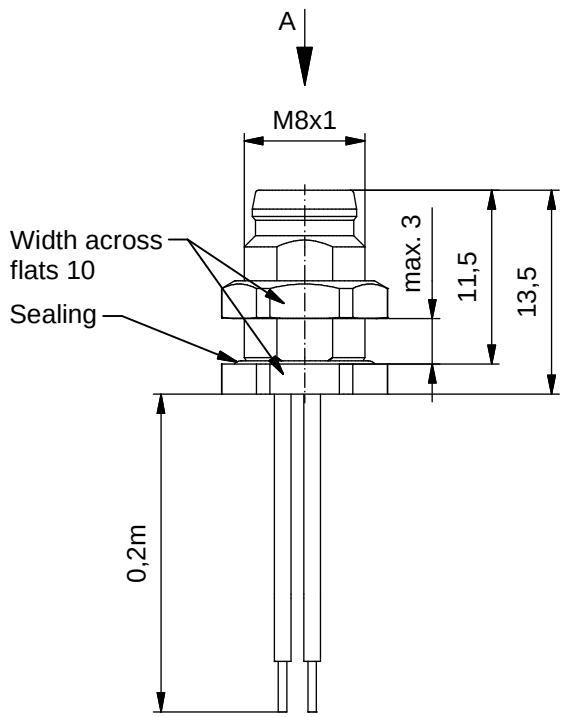


**Technical specification:**

| | | |
|---|---|---|
| Rated voltage: IEC 61076-2-104 | 3pos 60 V | 4pos 30V |
| Current rating: IEC 61076-2-104 | 3pos 3A at 40℃ | 4pos 3A at 40℃ |
| Insulation resistance: IEC 60512 | >=100 MΩ | |
| Pollution degree: IEC 60664-1 | 3/2 | |
| Degree of protection: IEC 60529 | IP 67, in mated condition | |
| Temperature range: IEC 60664-1 | -30℃ ... +80℃ | |
| Mating cycles: IEC 60512-9a | >=100 | |

**Materials:**

| | |
|---|---|
| Contact: | CuZn |
| Contact plating: | Nickel, gold plated |
| Contact carrier: | PA6, UL 94 |
| Sealing: | NBR |
| Socket housing: | CuZn, nickel plated |
| Grouting: | Polyurethane-resin, UL 94 |

**Installation specification:**

| | |
|---|---|
| Recommended torque: | 0,6 - 0,8 Nm |
| Conec installation tool: | Torque wrench: 36-000200<br>Insert across flats 10: 36-000270 |

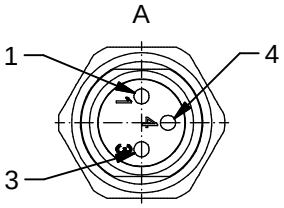


**Contact assignment:**

1 brown
3 blue
4 black

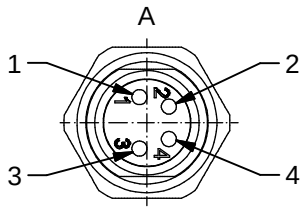


**Contact assignment:**

1 brown
2 white
3 blue
4 black

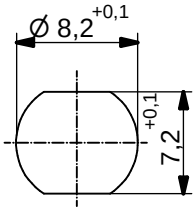


Minimum wall thickness 1,5mm, alternativ panel cut-out d=8,2

| Part no: | Description: | Pos | Length L: | Wire: |
|---|---|---|---|---|
| 42-01034 | SAL - 8 - FSH3 - 0,2 | 3 | 0,2m | AWG 24 PVC, UL |
| 42-xxxxx | SAL - 8 - FSH3 - ... | 3 | x | |
| 42-01035 | SAL - 8 - FSH4 - 0,2 | 4 | 0,2m | |
| 42-xxxxx | SAL - 8 - FSH4 - ... | 4 | x | |

DO NOT ALTER CAD DRAWING BY HAND

Directive 2002/95/EC RoHS compliant

Index: c 20.12.11 dbu Ä4186
data sheet revised

tolerance of wire: L <= 0,5m: L + 20mm
L > 0,5m: L + 4%

general tolerance: 0 ± 0,50mm
0,0 ± 0,25mm
0,00 ± 0,10mm

THIS DRAWING MAY NOT BE COPIED OR REPRODUCED IN ANY WAY, AND MAY NOT BE PASSED ON TO A THIRD PARTY WITHOUT WRITTEN PERMISSION. OWNERSHIP AND COPYRIGHT OF CONEC GmbH

dim. in mm

| | date | name |
|---|---|---|
| drawn | 27.10.09 | Burschik |
| appd. | 27.10.09 | Schmidt |

title: Male socket M8x1 with wire, backmounting

dwg no: 42K1A153

part no: see table