ITEM NO.	PART NUMBER	DESCRIPTION	QTY.	COMPONENT NOTES
1	50-00987	Connector, 4 pin M12 A-code plug, 12xL22mm, gold plated, molding style, solder cup, IP67, shielded	1	
2	50-00980	Connector, 4 pin M12 A-code socket, 12xL22mm, gold plated, molding style, solder cup, IP67, shielded	1	
3	30-01578	Wire, 4C TS, 22 AWG, UL20387, 300V, 105C, 60C oil, UV, 6 mm, shielded, VW-1, PVC, 80A, black	1	
4	24-00361	Overmold, M12 plug and jack, 90°	1	PVC, black
5	24-00349	Overmold, M12 plug and jack, 180°	1	PVC, black

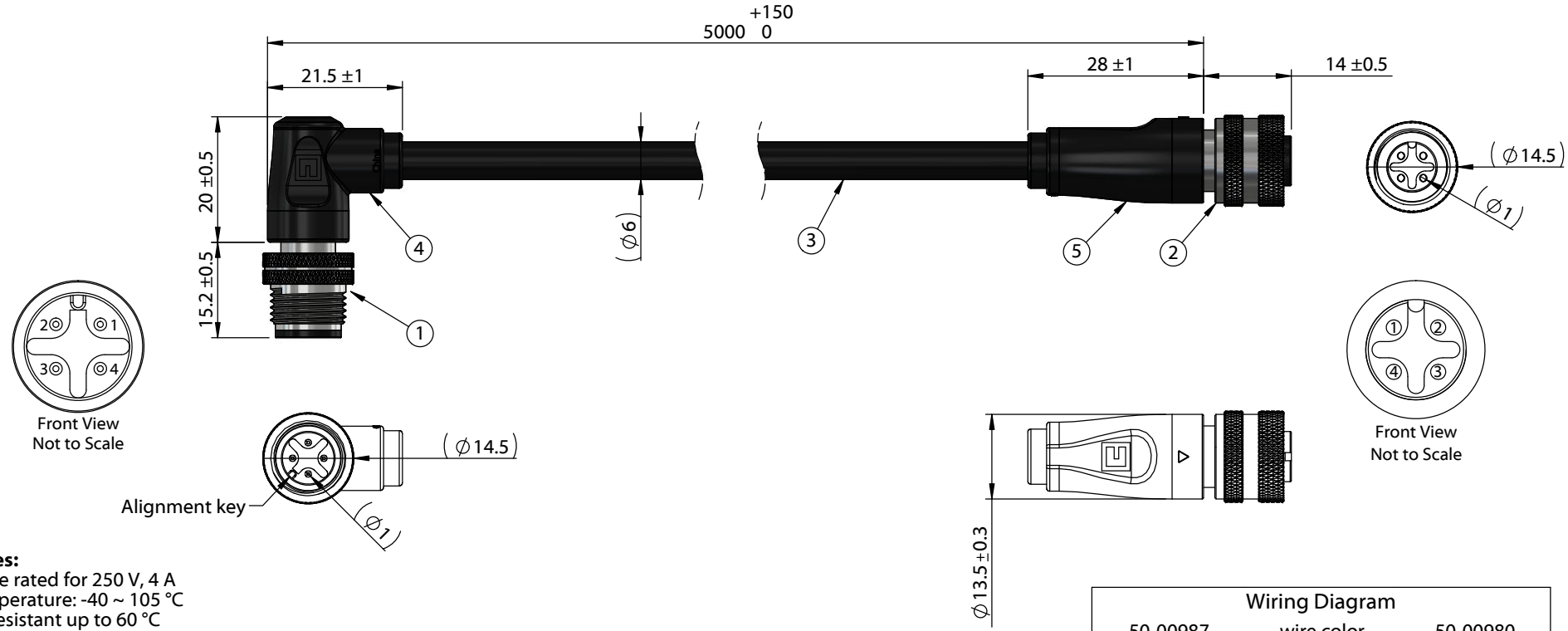

Notes:
Cable rated for 250 V, 4 A
Temperature: -40 ~ 105 °C
Oil resistant up to 60 °C
Water resistant up to 75 °C
UV resistant

IP67 waterproof rating when mated with corresponding (IP67) connector

Functionally equivalent components may be substituted

Wiring Diagram		
50-00987	wire color	50-00980
1	red	1
2	yellow	2
3	black	3
4	white	4
Shell	shield/drain	Shell

Revision:	Date:	Description:
A	01/04/2022	Initial release

Prepared: MP Digitally signed by MP Date: 2022.07.13 09:27:36 -07'00'

Verified: PB Digitally signed by PB Date: 2022.07.13 13:40:09 -07'00'

Dimensions are in millimeters.
Tolerances:
X: ± 0.5 mm
X.X: ± 0.3 mm
X.XX: ± 0.05 mm

Notes:

RoHS compliant

Function test: no open, no short circuit, no intermittent

Description:

Cable, 5000 mm, 1.0 mm 4C 90° 50-00987 M12 plug to 1.0 mm 50-00980 M12 socket, 22 AWG, 30-01578 wire

TENSILITY
tel 1.541.323.3228 800 877.670.7118
fax 1.541.323.4202 web tensility.com

Size: A
Part number: 10-05083
Scale: 1:1
Sheet 1 of 1

To see a custom version of this cable assembly, call Tensility at 541-323-3228 or email engineering@tensility.com

5 4 3 2 1