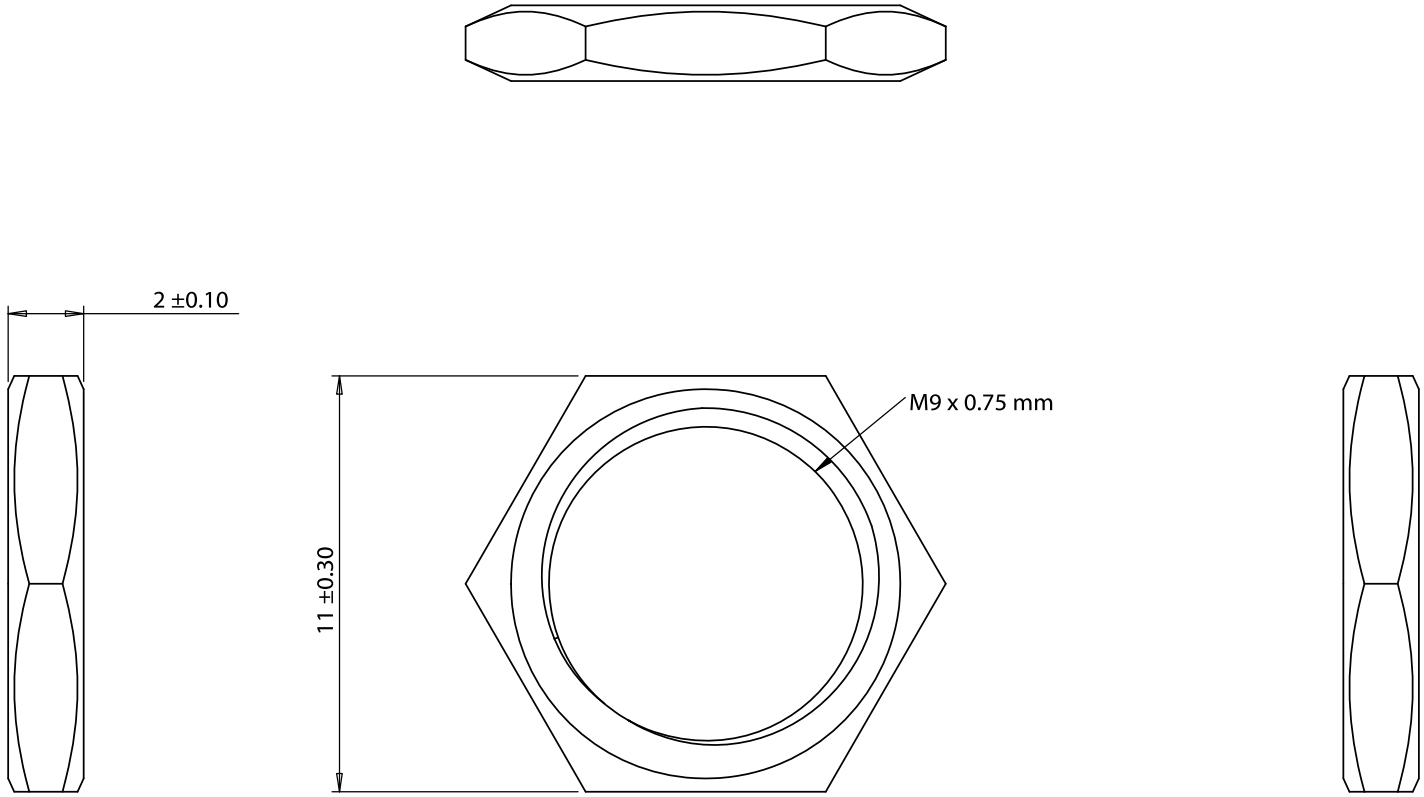

Revision:	Date:	Description:
A	8/8/2017	Initial release

Prepared: AG Digitally signed by AG Date: 2017.08.08 14:23:32 -07'00'

Verified: LA Digitally signed by LA Date: 2017.08.09 09:20:33 -07'00'

Dimensions are in millimeters.
Tolerances:
X: ± 0.5 mm
X.X: ± 0.3 mm
X.XX: ± 0.05 mm

Notes:

RoHS compliant

Function test: no open, no short circuit, no intermittent

Description:

Hardware, nut, hex, 11x2.0 mm, M9x0.75, brass, nickel plated

TENSILITY
tel 1.541.323.3228 800 877.670.7118
fax 1.541.323.4202 web tensility.com

Size: A

Part number: 56-00004

Scale: 5:1

Sheet 1 of 1

5 4 3 2 1