THIS DRAWING IS UNPUBLISHED. RELEASED FOR PUBLICATION ,19 .
© COPYRIGHT 19 BY AMP INCORPORATED. ALL RIGHTS RESERVED.

LOC	DIST
CM	53

REVISIONS

P	LTR	DESCRIPTION	DATE	DWN	APVD
	N	REACTIVATED -1 PER PR CM 94-73 REV & REDWN PER EC 0730-0121-94	7-25-94	KS	RS

1. PARTS MUST COMPLY WITH AMP SOLDERABILITY SPECIFICATION 109-11-3.
2. DIMENSIONS IN BRACKETS ARE IN INCHES.

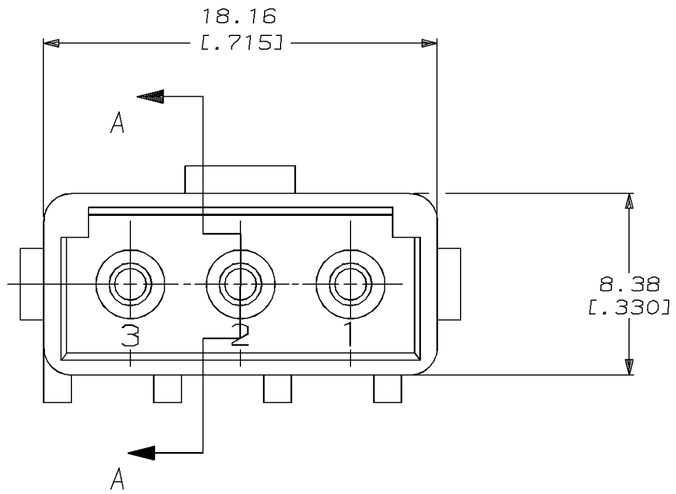

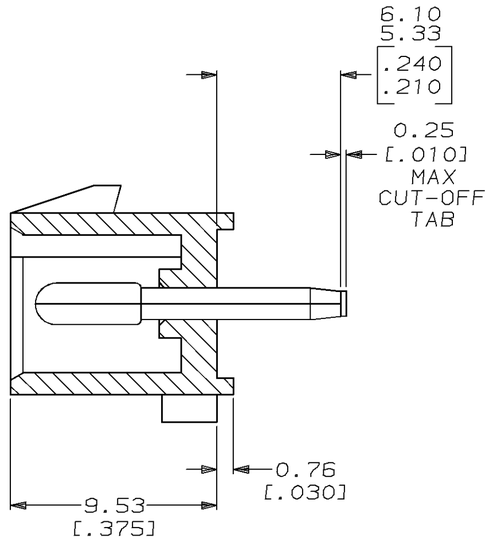

SECTION A–A

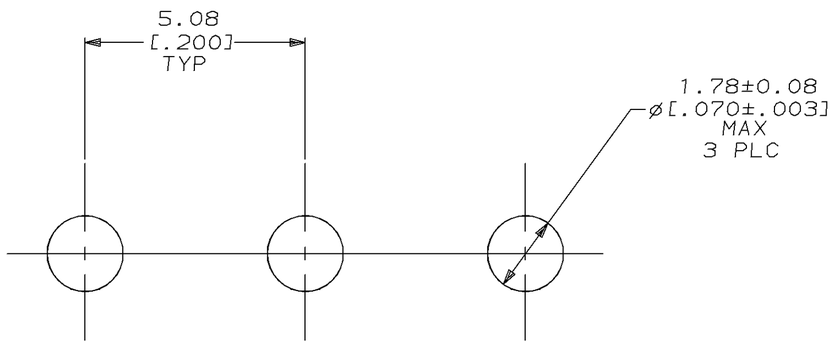

RECOMMENDED P.C. BOARD LAYOUT
FOR 3.18 [.125] THICK P.C. BOARD
SCALE 10:1

COPPER ALLOY, PRE-TIN	NYLON 6/6, NATURAL	350542-1
PIN CONTACT MATERIAL & FINISH	HOUSING MATERIAL & COLOR	PART NUMBER

THIS DRAWING IS A CONTROLLED DOCUMENT FOR AMP INCORPORATED. IT IS SUBJECT TO CHANGE AND THE CONTROLLING ENGINEERING ORGANIZATION SHOULD BE CONTACTED FOR THE LATEST REVISION.

DIMENSIONS: mm [INCHES]

TOLERANCES UNLESS OTHERWISE SPECIFIED:
0 PLC ±-
1 PLC ±-
2 PLC ±0.13[.005]
3 PLC ±-
4 PLC ±-
ANGLES ±0°30'

MATERIAL: SEE TABLE
FINISH: SEE TABLE

METRIC

DWN K. SALMON 7-25-94
CHK R. SWING 7-25-94
APVD C. MARTIN 7-28-94
PRODUCT SPEC –
APPLICATION SPEC –
WEIGHT –
CUSTOMER DRAWING

AMP
AMP Incorporated
Harrisburg, PA 17105-3608

NAME: HEADER ASSEMBLY, 3 CIRCUIT, COMMERCIAL MATE-N-LOK

SIZE	CAGE CODE	DRAWING NO		
A2	00779	C-350542		
		SCALE 5:1	SHEET 1 OF 1	REV N

350542

AMP 1471-9 REV 10/93

2 mbo/amp23993/u.pr94-73