MODEL NO.	PACKAGING
147-0701-801	ONE PCS PER BAG

REV	ECO	DATE
001	ECO-17-0032	11/28/2017
002	ECO-18-0020	08/21/2018

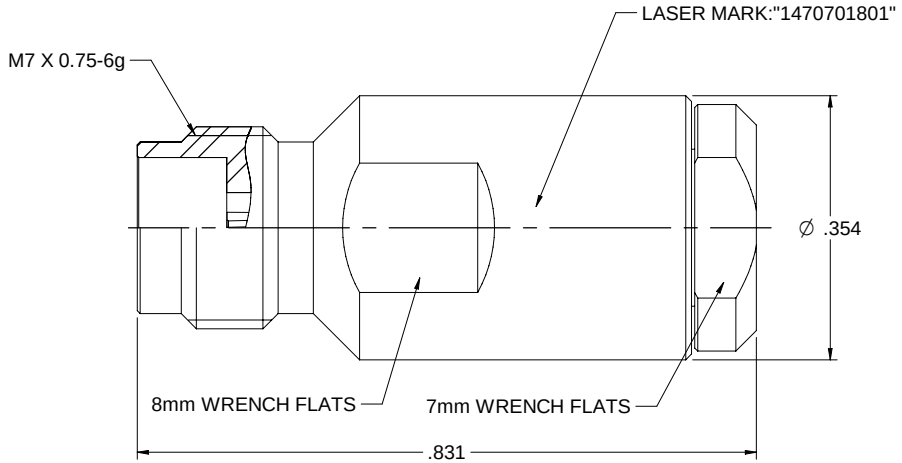

NOTES: UNLESS OTHERWISE SPECIFIED

1. MATERIAL & FINISH:
   1.1 BODY, BOLT & NUT: PASSIVATED STAINLESS STEEL
   1.2 CONTACT PIN : GOLD PLATED BERYLLIUM COPPER
   1.3 INSULATOR: PEEK NATURAL
   1.4 BODY: GOLD PLATED BRASS
   1.5 RESISTOR: 50 OHMS ±1% 1/4 W

2. ELECTRICAL:
   2.1 IMPEDANCE: 50 OHMS
   2.2 FREQUENCY RANGE: DC-50 GHz
   2.3 RETURN LOSS: -20DB MAX

3. MECHANICAL:
   3.1 ENGAGEMENT/ DISENGAGEMENT FORCE: 0.23NM MAX
   3.2 DURABILITY: 500 CYCLES MIN

4. ENVIRONMENT:
   4.1 THERMAL SHOCK: MIL-STD-202, METHOD 107, CONDITION B.
   4.2 OPERATING TEMPERATURE: -65 TO 165°C
   4.3 SHOCK: MIL-STD-202, METHOD 213, CONDITION I
   4.4 VIBRATION: MIL-STD-202, METHOD 204, CONDITION D
   4.5 MOISTURE RESISTANCE: MIL-STD-202, METHOD 106

cinch Connectivity Solutions
This PROPRIETARY Document is property of Cinch Connectivity Solutions. Unauthorized distribution, use or reproduction, and/or disclosure of its contents or understanding that it is not intended to confer any patent, copyright or other proprietary rights, is prohibited.
INTERPRET DRAWING IN ACCORDANCE WITH ASME Y14.5-2009.

Model No. 147-0701-801			Johnson
RoHS2 ☑ 2011/65/EU	Cage Code		Title: TERMINATION JACK,50 OHMS,2.4mm
UNLESS OTHERWISE SPECIFIED UNITS INCH	3RD ANGLE PROJECTION		Drawing No. 147-0701-801 — Rev. 002
.XXX ±.02 .XXXX ±.01 ANGLES ±5°	Drawn By: Betty.Yu		
	Date: 08/21/2018	Size C — DO NOT SCALE DRAWING	Workmanship Std: NONE — Sheet 1 of 1