| DWG NO. | SH | REV |
|---|---|---|
| C–NBCCDB–C199 | 1 | B |

TABLE 1

| AHSP P/N | LENGTH "A" | ACD P/N | DIAMETER "B" | DESCRIPTION |
|---|---|---|---|---|
| NBCCDB–C102 | 2000 MM ±50 MM | CS–SASMINIHD2–002 | 7.0" ± 1.0" | MINISAS HD TO MINISAS HD 28AWG, 2M |
| NBCCDB–C103 | 3000 MM ±75 MM | CS–SASMINIHD2–003 | 7.0" ± 1.0" | MINISAS HD TO MINISAS HD 28AWG, 3M |

REVISIONS

| ZONE | REV. | ECN NUMBER | DESCRIPTION | BY | DATE | APPROVED |
|---|---|---|---|---|---|---|
| | A | RGAO–21010302 | NEW RELEASE | R.LI | 12/04/2020 | F.HONG |
| | B | RGAO–21020309 | ADDED DESCRIPTION COLUMN TO TABLE 1. | N.ZENG | 2/4/2021 | F.HONG |

TABLE 2

| ITEM No. | DESCRIPTION |
|---|---|
| 1 | 28 AWG 4PR,BLACK,UL CL2 CSA FT4 75°C, AWM 75°C |
| 2 | PLUG, HDMSAS – REFERENCE SFF–8644 |
| 3 | LABEL, WRAPPED – AHSP P/N & REV, DATE CODE, COUNTRY OF ORIGIN AND SERIAL NUMBER |
| 4 | LANYARD, HDMSAS, BLUE, UL 94V–0 |

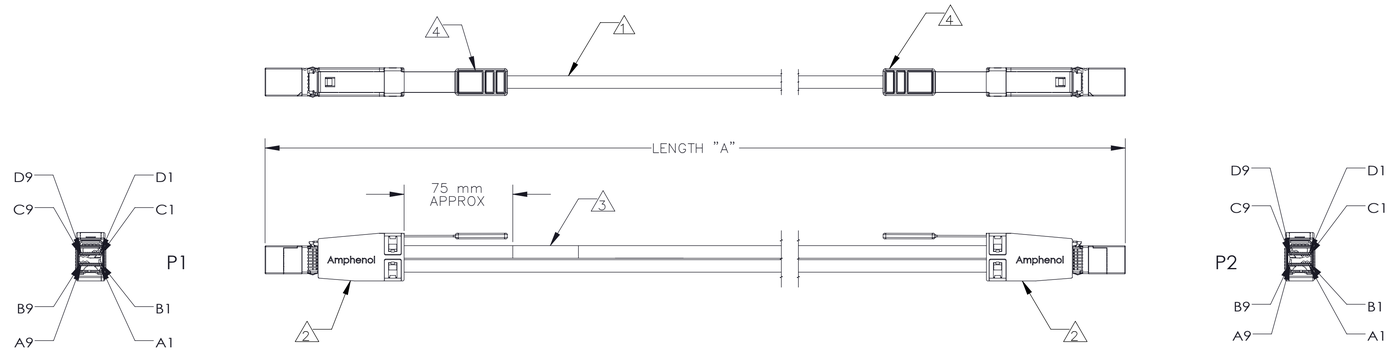


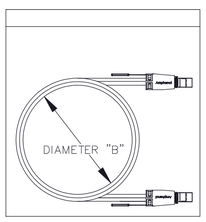


BAGGED CABLE ASSY
NOT TO SCALE

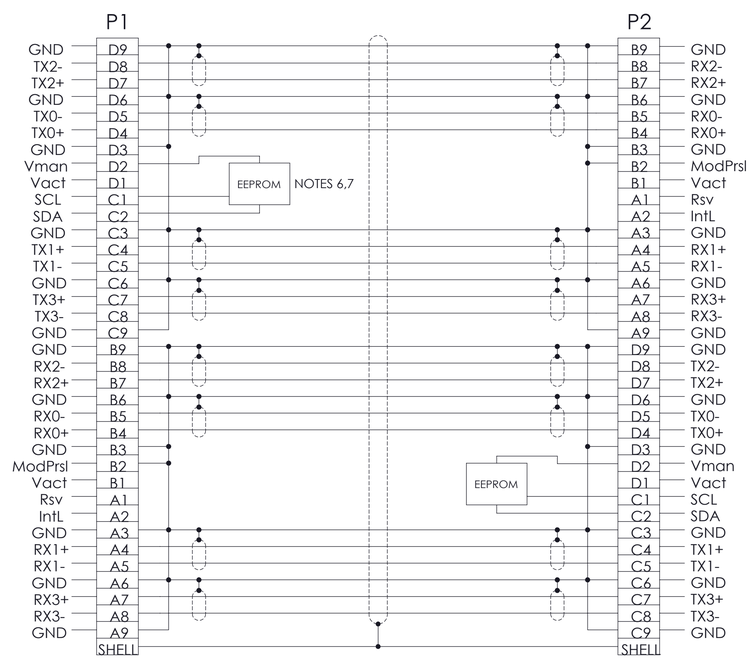


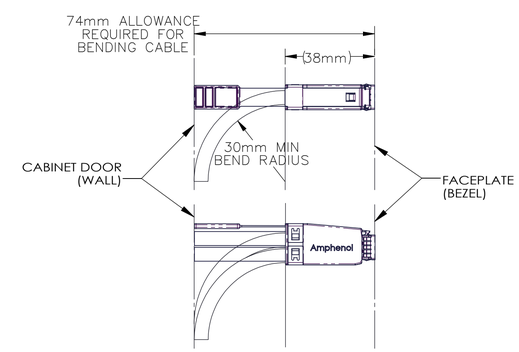


MIN BEND ALLOWANCE FROM FACEPLATE (28AWG)

1. THIS DRAWING IS RESERVED FOR AMPHENOL CABLES ON DEMAND (NO CUSTOMER DRAWING)..
2. TEST COMPLETED ASSEMBLIES PER ACS–1189. TEST ASSEMBLIES AT 12.00 Gbps AND/OR PER AMPHENOL IOPS–4001 SPEC.
3. UL LABEL MUST BE ON SHIPPING CARTON PER SUBJECT 764 OF THE UL COMPONENT WIRING HARNESS (ZPFW2) FILE #E86140. CSA LABEL MUST BE ON SHIPPING CARTON.
4. PACKAGE COMPLETED ASSY IN AN APPROPRIATELY SIZED ANTI–STATIC BAG.
5 INSTALL DUST COVER OVER EACH CONNECTOR PRIOR TO SHIPMENT TO CUSTOMER.
6. EPROM CONTENT SHALL BE COMPLIANT WITH SFF–8636 AND SFF–8024 FOR SAS 3.0.
7. CAUTION: ANTI–STATIC CONTROL MEASURES MUST BE OBSERVED DURING THE MANUFACTURE OF THIS ASSEMBLY.
8. ALL MATERIALS USED IN THE MANUFACTURE OF THIS ASSEMBLY SHALL COMPLY WITH AMPHENOL REGULATED MATERIALS SPECIFICATION ACS–1152.

NOTES: UNLESS OTHERWISE SPECIFIED

| TOLERANCES | |
|---|---|
| .00 | ± 0.010 |
| .000 | ± .003 |
| .0000 | ± 0.0001 |
| ANGLES | ± 1.0° |

UNLESS OTHERWISE SPECIFIED DIMENSIONS ARE IN INCHES

DWN 12/04/2020 R.LI
CHK 12/04/2020 F.HONG
APVD 12/04/2020 W.ZHANG

**Amphenol AHSP**
A Division of Amphenol Corporation
200 Innovative Way, Suite 201, Nashua, N.H. 03062 (603) 879-3000

TITLE
CABLE ASSEMBLY, MINISAS HD TO MINISAS HD 4X, 28AWG,SAS 3.0,12Gbps

INTERPRET PER ANSI Y14.5

CODE IDENT 31413

CUSTOMER USE DRAWING

| PART NO. | REV |
|---|---|
| SEE TABLE 1 | N/A |
| DRAWING NO. C–NBCCDB–C199 | B |

SIZE D SCALE 1:1 Sheet1 OF 1

Amphenol RoHS 2011/65/EU

DWG NO. C–NBCCDB–C199 SH 1 REV B