PART NUMBER:	098982 5111	CODING:	BLACK
MODULES P/N TO BE USED:	098982 5155	10W	GREEN
	098982 1015	20W	GREEN

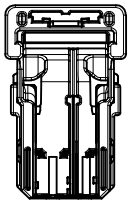

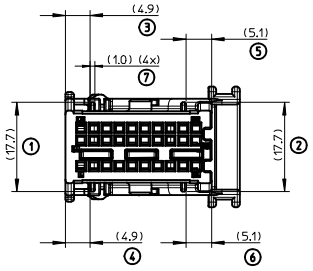

PART NUMBER:	098982 5112	CODING:	GREY
MODULES P/N TO BE USED:	098982 5156	10W	BLUE
	098982 1019	20W	BROWN

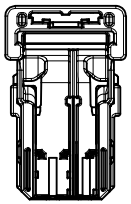

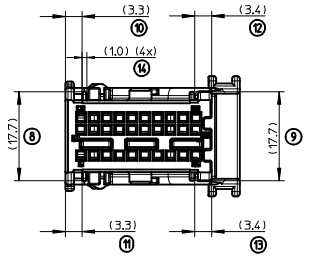

PART NUMBER:	098982 5119	CODING:	PURPLE (UNIVERSAL)
MODULES P/N TO BE USED:	098982 5155 or 098982 5156	10W	GREEN - BLUE
	098982 1015 or 098982 1019	20W	GREEN - BROWN

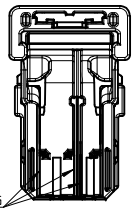

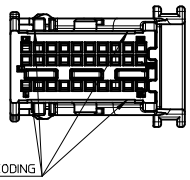

NO CODING

NO CODING

CODING OPTIONS (VIEWS WITHOUT LOCKING LEVER)

CLEARANCE FOR CONNECTOR MATE AND UNMATE

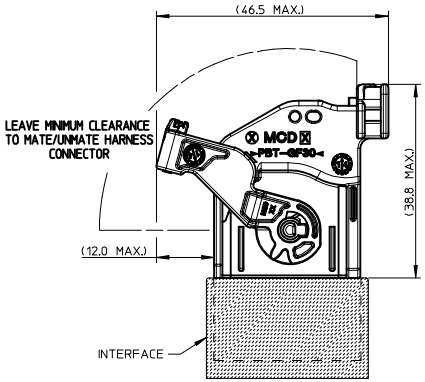

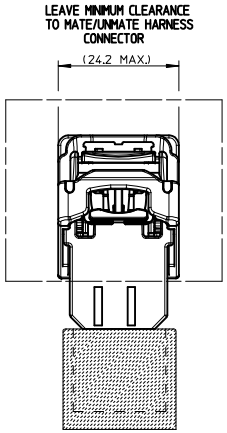

PRE-LOCKING POSITION

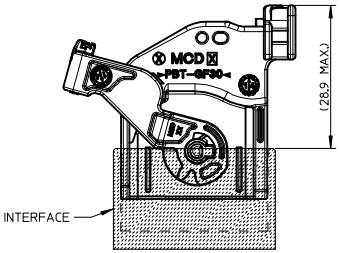

CONNECTOR FULLY MATED

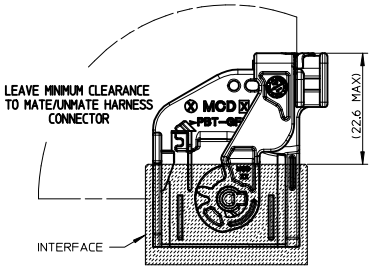

MODIFICATIONS

REV.	DESCRIPTIONS	NAME	DATE
A	-DOCUMENT FIRST RELEASE.	GD	2017/02/10

ISO VIEW

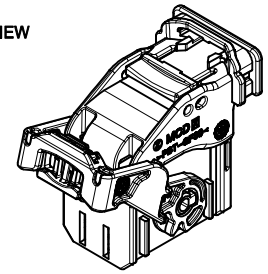

DOC FIRST RELEASE
EC NO: G2017-0052
DRWN:GDESBRUERES 2017/02/10
CHKD:CBOUCHAN 2017/02/13
APPR:SLAFAURE 2017/03/14
DESCRIPTION
REV
A

QUALITY SYMBOLS: =0 (4 PLACES), =0 (3 PLACES), =0 (2 PLACES), =3 (1 PLACE, 0 PLACE)

GENERAL TOLERANCES (UNLESS SPECIFIED)

	mm	INCH
4 PLACES	± ---	± ---
3 PLACES	± ---	± ---
2 PLACES	± ---	± ---
1 PLACE	± ---	± ---
0 PLACE	± ---	± ---
ANGULAR	±---°	

DRAFT WHERE APPLICABLE MUST REMAIN WITHIN DIMENSIONS

DIMENSION STYLE: MM ONLY
SCALE: 2:1
DESIGN UNITS: METRIC
FIRST ANGLE PROJECTION

DRAWN BY: GDESBRUERES DATE: 2017/02/10
CHECKED BY: CBOUCHAN DATE: 2017/02/10
APPROVED BY: SLAFAURE DATE: 2017/03/14

TITLE: 30CKT MQS FEMALE CONNECTOR

molex

MATERIAL NO.: SEE CHART
DOCUMENT NO.: SD-98982-007
SHEET NO.: 1 OF 2
SIZE: A1

THIS DRAWING CONTAINS INFORMATION THAT IS PROPRIETARY TO MOLEX INCORPORATED AND SHOULD NOT BE USED WITHOUT WRITTEN PERMISSION

MODIFICATIONS

REV.	DESCRIPTIONS	NAME	DATE
A	-DOCUMENT FIRST RELEASE.	GD	2017/02/10

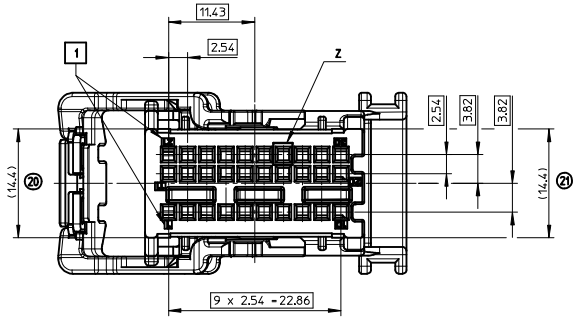

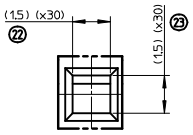

DETAIL Z
10:1

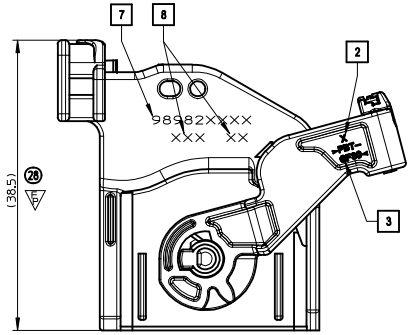

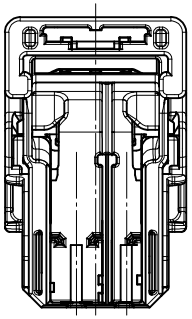

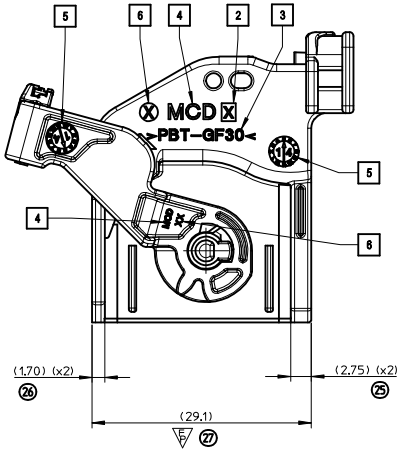

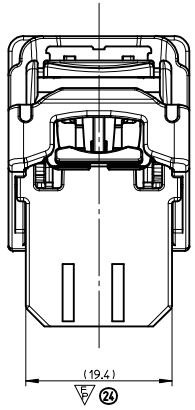

REPRESENTED ITEM : BLACK CODING

MARKINGS ON PARTS		
1 TERMINALS CAVITIES ID	- PACKAGING ACCORDING:	PK-31302-279
2 MOLD CAVITY ID.	- PRODUCT SPECIFICATION N°:	TBD
3 MATERIAL	- APPLICATION SPECIFICATION N°:	TBD
4 SUPPLIER PLANT PRODUCTION	- THE FEMALE CONNECTOR WILL ONLY MATCH WITH MOLEX MODULES P/Ns: (SEE SHEET 1)	10CKT GREEN: 098982 5155 10CKT BLUE: 098982 5156 20CKT GREEN: 098982 1015 20CKT BROWN: 098982 1019
5 DATUM: MM/YY		
6 MOLD REVISION LEVEL		
7 ASSEMBLY P/N° LASER MARKING	- CAVITIES LOCATION AS PER INTERFACE DRAWING N°:	SD-98982-010
8 ASSEMBLY LASER MARKING DATE: DAY / YEAR	- PRODUCT WEIGHT (GRAMS):	9,8 GRAMS

DOC FIRST RELEASE
EC NO: G2017-0052
DRWN:GDESBRUERES 2017/02/10
CHKD:CBOUCHAN 2017/02/13
APPR:SLAFAURE 2017/03/14
DESCRIPTION
REV A

QUALITY SYMBOLS
=0
=0
=3

GENERAL TOLERANCES (UNLESS SPECIFIED)

	mm	INCH
4 PLACES	± ---	± ---
3 PLACES	± ---	± ---
2 PLACES	± ---	± ---
1 PLACE	± ---	± ---
0 PLACE	± ---	± ---
ANGULAR	±---°	

DRAFT WHERE APPLICABLE MUST REMAIN WITHIN DIMENSIONS

DIMENSION STYLE: MM ONLY
SCALE: 3:1
DESIGN UNITS: METRIC
FIRST ANGLE PROJECTION

DRAWN BY: GDESBRUERES DATE: 2017/02/10
CHECKED BY: CBOUCHAN DATE: 2017/02/10
APPROVED BY: SLAFAURE DATE: 2017/03/14

TITLE: 30CKT MQS FEMALE CONNECTOR

molex

MATERIAL NO.: SEE SHEET 1
DOCUMENT NO.: SD-98982-007
SHEET NO.: 2 OF 2
SIZE: A1

THIS DRAWING CONTAINS INFORMATION THAT IS PROPRIETARY TO MOLEX INCORPORATED AND SHOULD NOT BE USED WITHOUT WRITTEN PERMISSION

tb_frame_A1_P_AM_F
Rev. G 2012/01/11