Technical Data Sheet		Rosenberger
N 50 Ω	Right Angle Plug	**53S205-315N5**

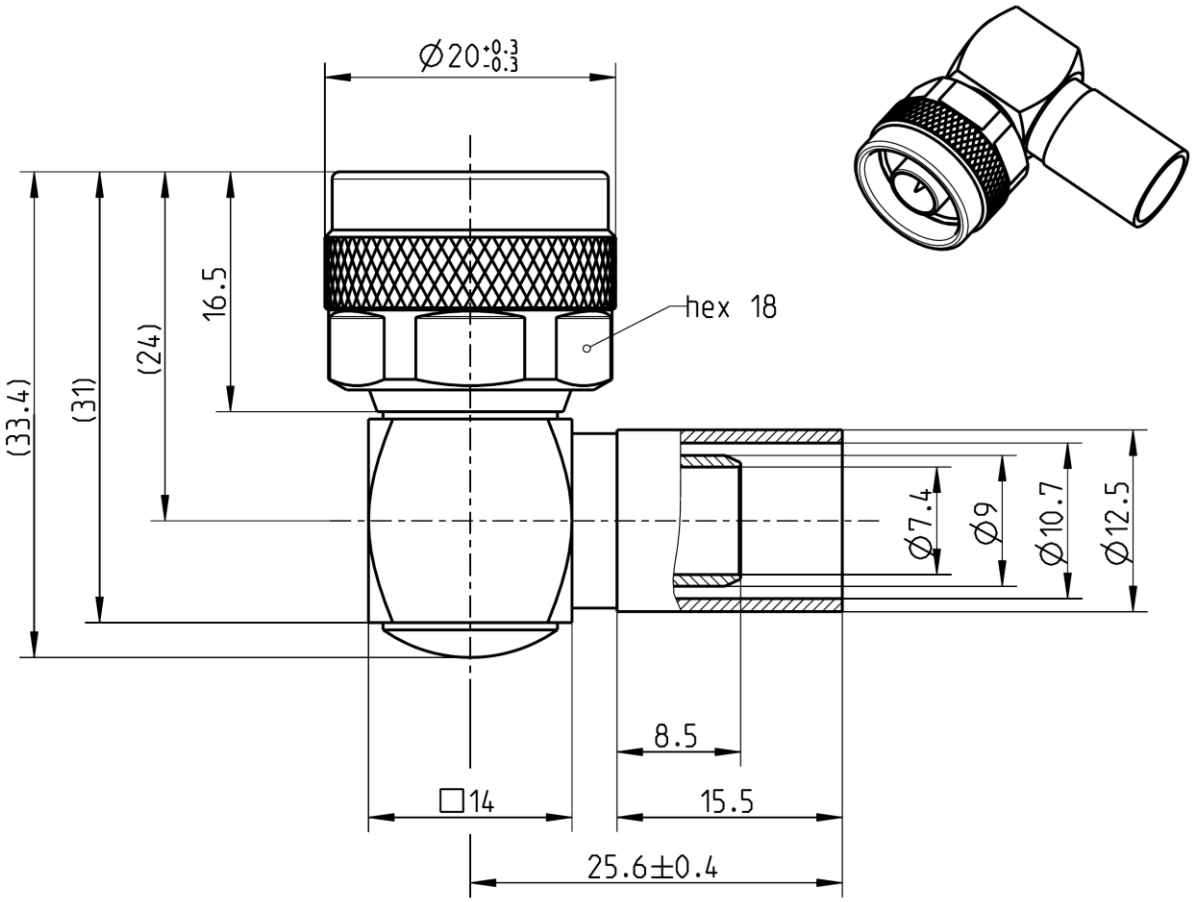

All dimensions are in mm; tolerances according to ISO 2768 m-H

Interface

According to	IEC 61169-16, MIL-PRF-39012, CECC 22210

Documents

Assembly instruction	53 S5

Material and plating

Connector parts	**Material**	**Plating**
Center contact	Brass	AuroDur®, gold plated
Outer contact	Brass	Flash white bronze over silver(e.g. Optargen®)
Body	Brass	Flash white bronze over silver(e.g. Optargen®)
Dielectric	PTFE	
Gasket	Silicone	
Crimping ferrule	Copper	Flash white bronze over silver(e.g. Optargen®)

Dieses Dokument ist urheberrechtlich geschützt ● This document is protected by copyright ● Rosenberger Hochfrequenztechnik GmbH & Co. KG

Rosenberger Hochfrequenztechnik GmbH & Co. KG
P.O.Box 1260 D-84526 Tittmoning Germany
www.rosenberger.com

Tel. : +49 8684 18-0
Email : info@rosenberger.com

Electrical data

Impedance	50 Ω
Frequency	DC to 11 GHz
Return loss	≥ 35 dB, DC to 1 GHz
	≥ 28 dB, 1 to 2 GHz
	≥ 18 dB, 2 to 4 GHz
Insertion loss	≤ 0.05 dB, DC to 2 GHz
Insulation resistance	≥ 5 x10^3 MΩ
Center contact resistance	≤ 1 mΩ
Outer contact resistance	≤ 0.25 mΩ
Working voltage	500 V rms
Power handling (at 20 °C, sea level, VSWR 1.0)	1000 W @ 1 GHz
	700 W @ 2 GHz
RF-leakage	≥ 128 dB up to 1 GHz

- Limitations are possible due to the used cable type -

Mechanical data

Mating cycles	min. 500
Coupling nut retention	≥ 450 N
Center contact captivation: axial	≥ 28 N
radial	≥ 3 Ncm
Coupling test torque	max. 1.7 Nm
Recommended torque	0.7 Nm to 1.1 Nm

Environmental data

Temperature range	-55°C to +155°C
Thermal shock	MIL-STD-202, Meth. 107, Cond. B
Corrosion	MIL-STD-202, Meth. 101, Cond. B
Vibration	MIL-STD-202, Meth. 204, Cond. B
Shock	MIL-STD-202, Meth. 213, Cond. I
Moisture resistance	MIL-STD-202, Meth. 106
RoHS	compliant

Tooling

Crimping tool	11W150-000
Crimp insert	11W150-115

Suitable cables

RG 213 /U

Weight

Weight	45.2 g/pce

While the information has been carefully compiled to the best of our knowledge, nothing is intended as representation or warranty on our part and no statement herein shall be construed as recommendation to infringe existing patents. In the effort to improve our products, we reserve the right to make changes judged to be necessary.

For the installation of the electrotechnical equipment, particular electrotechnical expertise is required.

Draft	Date	Approved	Date
Inge Mühlauer	08.06.04	Chr. Janßen	28.01.21

Rev.	Engineering change number	Name	Date
h00	20-1927	S. Huber-Siegl	28.01.21

Rosenberger Hochfrequenztechnik GmbH & Co. KG
P.O.Box 1260 D-84526 Tittmoning Germany
www.rosenberger.com

Tel. : +49 8684 18-0
Email : info@rosenberger.com

Dieses Dokument ist urheberrechtlich geschützt ● This document is protected by copyright ● Rosenberger Hochfrequenztechnik GmbH & Co. KG