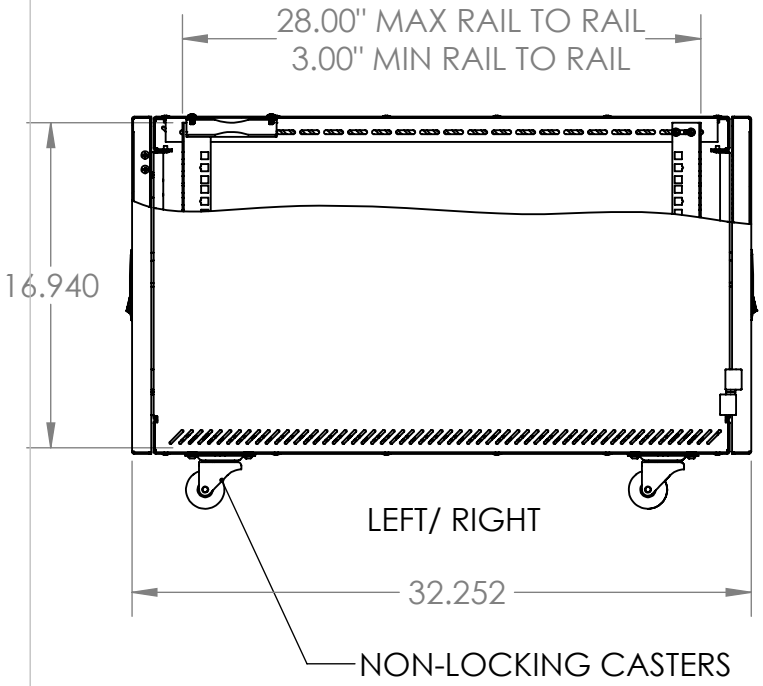

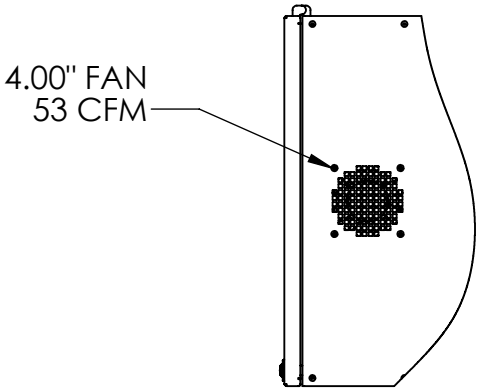

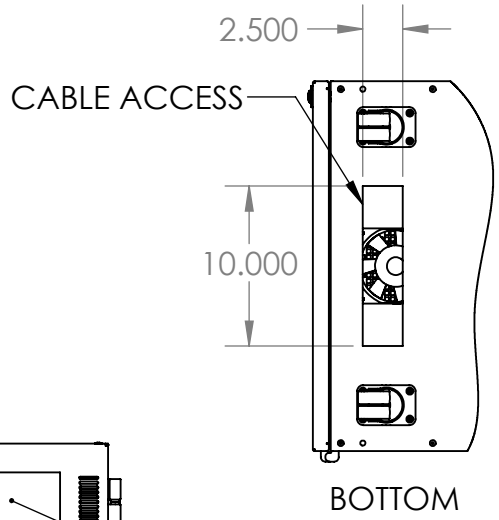

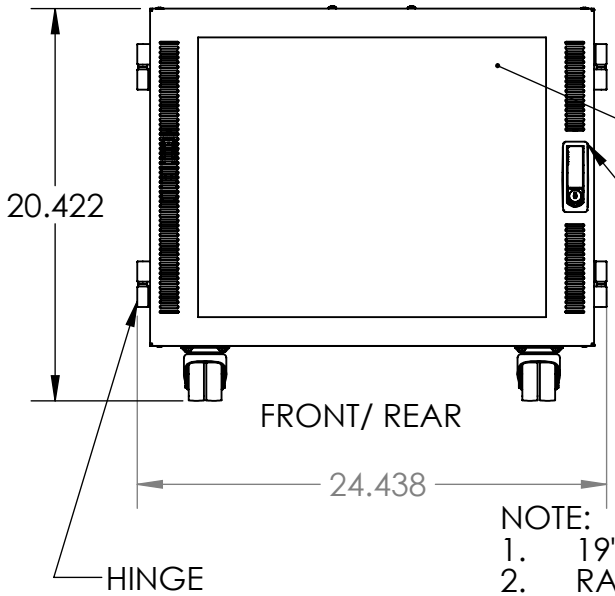

NOTE:
1. 19" EIA RACK MOUNT COMPLIANT.
2. RAILS ACCEPT 3/8" CAGE NUT.
3. REMOVABLE DOORS, OPEN 180°.
4. BLACK POWDER COAT.

PROPRIETARY AND CONFIDENTIAL
THE INFORMATION CONTAINED IN THIS DRAWING IS THE SOLE PROPERTY OF KENDALL HOWARD. ANY REPRODUCTION IN PART OR AS A WHOLE WITHOUT THE WRITTEN PERMISSION OFKENDALL HOWARD IS STRICTLY PROHIBITED.

WEB PRINT

NEXT ASSY	USED ON
APPLICATION	

UNLESS OTHERWISE SPECIFIED:
DIMENSIONS ARE IN INCHES
TOLERANCES:
FRACTIONAL ±1/8
ANGULAR: BEND ±1DEGREE
TWO PLACE DECIMAL ±.03
THREE PLACE DECIMAL ±.01
Surface Area
MATERIAL
FINISH
DO NOT SCALE DRAWING

	NAME	DATE
DRAWN	BS	03/20/2014
CHECKED		
ENG APPR.		
MFG APPR.		
Q.A.		

COMMENTS:

KENDALL HOWARD

TITLE:
8U COMPACT SOHO SERVER CABINET

SIZE	DWG. NO.	REV
A	1932-3-001-08 WP	-

SCALE: 1:12 | WEIGHT: 70.39 | SHEET 1 OF 1

5 4 3 2 1