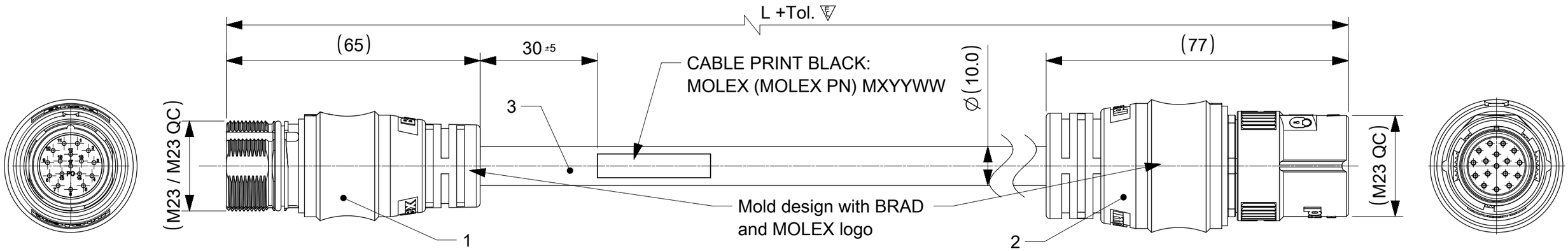

Connector pin assignment
Plug M23 17P MA

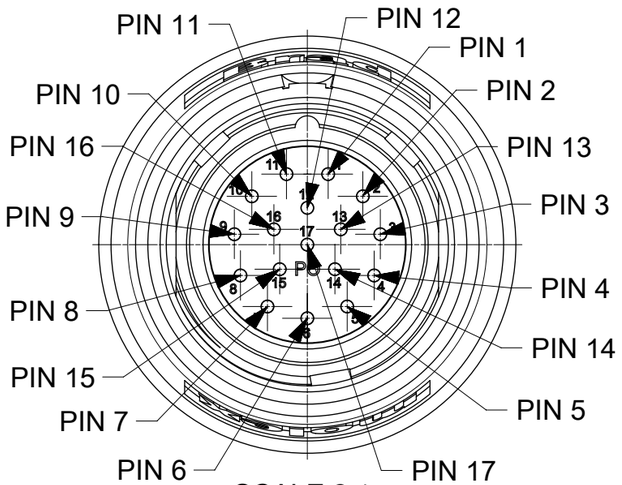

SCALE 2:1

WIRING DIAGRAM

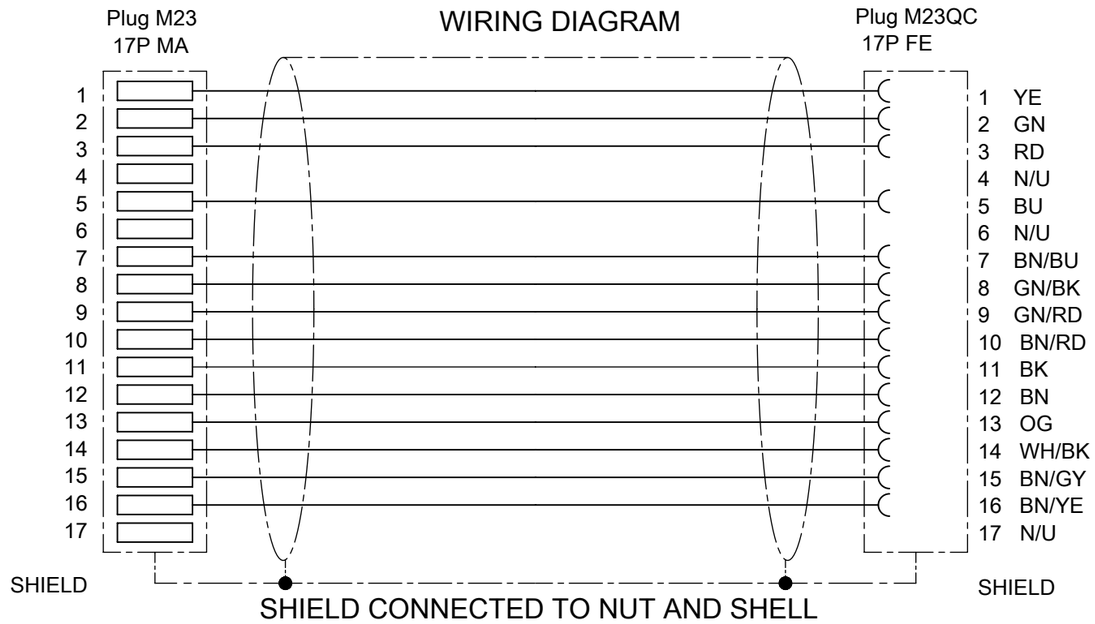

Connector pin assignment
Plug M23 17P FE

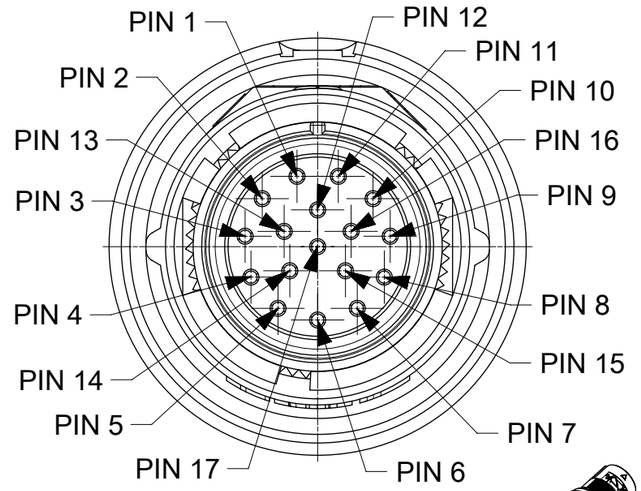

SCALE 2:1

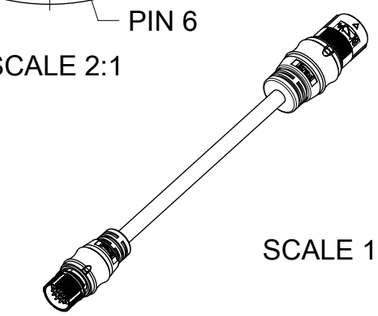

SCALE 1:4

Technical Data:

Number of positions	17
Number of contcts	17
Contact Ø [mm]	1
Nominal current [A]	9 (for 0.50 mm²) 4.5 (for 0.25 mm²) 3 (for 0.14 mm²)
Nominal voltage [V~] Degree of polution 3	160
Test voltage [V~]	1500
Max. contact resistance [mΩ]	3
Insulation resistance [MΩ]	$>10^{10}$
Protection	IP67 (connected)
Temperatur range (fixed)	-40°C to 90°C
Temperature range (flex)	-25°C to 80°C

Further details see Product Specification 1204900050

The cordsets delivered packed into carton without PE-bag

TABLE1

MOLEX PN	L [mm]	Tol. [mm]
1204900501	1000	+40
1204900502	2000	+60
1204900503	3000	+60
1204900504	4000	+60
1204900505	5000	+60
1204900506	10000	+80
1204900507	15000	+140
1204900508	20000	+140

TABLE 2

ITEM	QTY	DESCRIPTION
1	1	PLG M23 17P SC MA STR SHLD
2	1	PLG M23QC 17P FE STR SHLD
3	-	CABLE 3X(2X0.14)+2X0.50+4X0.14+4X0.25 WS

THIS DRAWING CONTAINS INFORMATION THAT IS PROPRIETARY TO MOLEX ELECTRONIC TECHNOLOGIES, LLC AND SHOULD NOT BE USED WITHOUT WRITTEN PERMISSION

SYMBOLS: E = 0; E = 1; E = 0; S = 0; ▼ = 0; C = 0; ☒ = 0; ■ = 0; V = 0

DIMENSION UNITS: mm
SCALE: 1:1
GENERAL TOLERANCES (UNLESS SPECIFIED)
ANGULAR TOL ± 1.0 °
4 PLACES ±
3 PLACES ±
2 PLACES ± 0.05
1 PLACE ± 0.3
0 PLACES ± 0.5
DRAFT WHERE APPLICABLE MUST REMAIN WITHIN DIMENSIONS

CURRENT REV DESC:
EC NO: 625960
DRWN: THAERDT 2019/10/21
CHK'D: RSILLER 2019/11/21
APPR: RSILLER 2019/11/21
INITIAL REVISION:
DRWN: MSCHERER 2018/06/29
APPR: RSILLER 2019/11/21

THIRD ANGLE PROJECTION
DRAWING: A3-SIZE
SERIES: 120490

molex

CSE M23QC 17P SC MA STR WSOR FE 1XM SHLD

PRODUCT CUSTOMER DRAWING

DOCUMENT NUMBER	DOC TYPE	DOC PART	REVISION
1204901575	PSD	000	A

MATERIAL NUMBER	CUSTOMER	SHEET NUMBER
SEE TABLE 1	GENERAL MARKET	1 OF 1

DOCUMENT STATUS	P1	RELEASE DATE	2019/11/21 07:37:48

FORMAT: master_tmpl_v5-A3
REVISION: H
DATE: 2018/01/16